CASA FAMILIA

KITCHEN | VANITY | LAUNDRY SHOP-DRAWINGS

FINISH:

- K019 SILVER LIBERTY ELM

APPLIANCES:

REGULAR UNITS:

28" REFRIGERATOR GE MODEL GTE18GSNRSS
24" DISHWASHER GE MODEL GDT535PSRSS
30" RANGE GE MODEL GRF400PV
30" MICROWAVE GE MODEL JVM3160RFSS

ADA UNITS:

28" REFRIGERATOR GE MODEL GTE18GSNRSS
24" DISHWASHER GE MODEL GDT225SSLSS (ADA)
30" RANGE GE MODEL GRS500PVSS (ADA)
30" MICROWAVE GE MODEL JES1145SHSS
30" HOOD GE MODEL JVX3300SJSS

GENERAL NOTES:

*ALL DIMENSIONS ARE FROM FINISHED WALL TO FINISHED WALL
*ALL DIMENSIONS ARE FROM FINISHED FLOOR TO FINISHED CEILING
*NOT INCLUDED: APPLIANCES, FIXTURES, PLUMBING, AND COUNTER TOPS
*IT'S ARCHITECT'S RESPONSIBILITY TO CONFIRM KITCHEN & VANITY CABINETS COMPLY WITH BUILDING FHA & ADA CODES.

REVISION LOG

REV.	DATE	BY	DESCRIPTION
1.0	10/06/2023	V.U	
2.0	07/18/2024	A.C	
3.0	09/18/2024	A.C	
4.0	10/30/2024	A.C	
5.0	11/05/2024	A.C	

OWNER: ATLANTIC PACIFIC COMMUNITIES | 10951 SW 84th St., MIAMI-DADE, FLORIDA 33173

CASA FAMILIA

KITCHEN | VANITY SHOP-DWGS

COVER

SHEET NUMBER:

DATE:
REV:
DIMENSIONS:
DRAWN BY:

PROJECT #:

CASA FAMILIA
KITCHEN | VANITIES

ITALIAN KITCHEN AND BATH
kitchen | bath | tile | closet
1777 NW 72TH AVE. MIAMI FL, 33126
T. 305.599.9000 F. 305.599.9870

CASA FAMILIA

MATRIX

		VANITY TYPE					
UNIT NAME	**QTY TOTAL**	**V1**	**V2**	**V3**	**V4**	**KITCHEN TYPE**	**KITCHEN TYPE QTY**
BUILDING TYPE A							
UNIT A1	14	1				K1	**K1 32**
UNIT A2 FA	3		1			K2	**K2 6**
UNIT A3	2			1		K1	**K3 6**
UNIT B1	3	1			1	K3	**K4 6**
UNIT B2 FA	3		1		1	K4	
BUILDING TYPE B							
UNIT A1	14	1				K1	
UNIT A2 FA	3		1			K2	
UNIT A3	2			1		K1	
UNIT B1	3	1			1	K3	
UNIT B2 FA	3		1		1	K4	
	50						

KITCHEN TOTAL QTY = 50

VANITY TOTAL QTY = 62

CASA FAMILIA

MATRIX

MATRIX

SHEET NUMBER:

DATE:
REV:
DIMENSION:
DRAWN BY:

PROJECT #:

CASA FAMILIA
KITCHEN | VANITIES

ITALIAN KITCHEN AND BATH
kitchen | bath | tile | closet
1777 NW 72TH AVE. MIAMI FL, 33126
T. 305.599.9000 F. 305.599.9870

KITCHEN TYPE K
UNIT A1

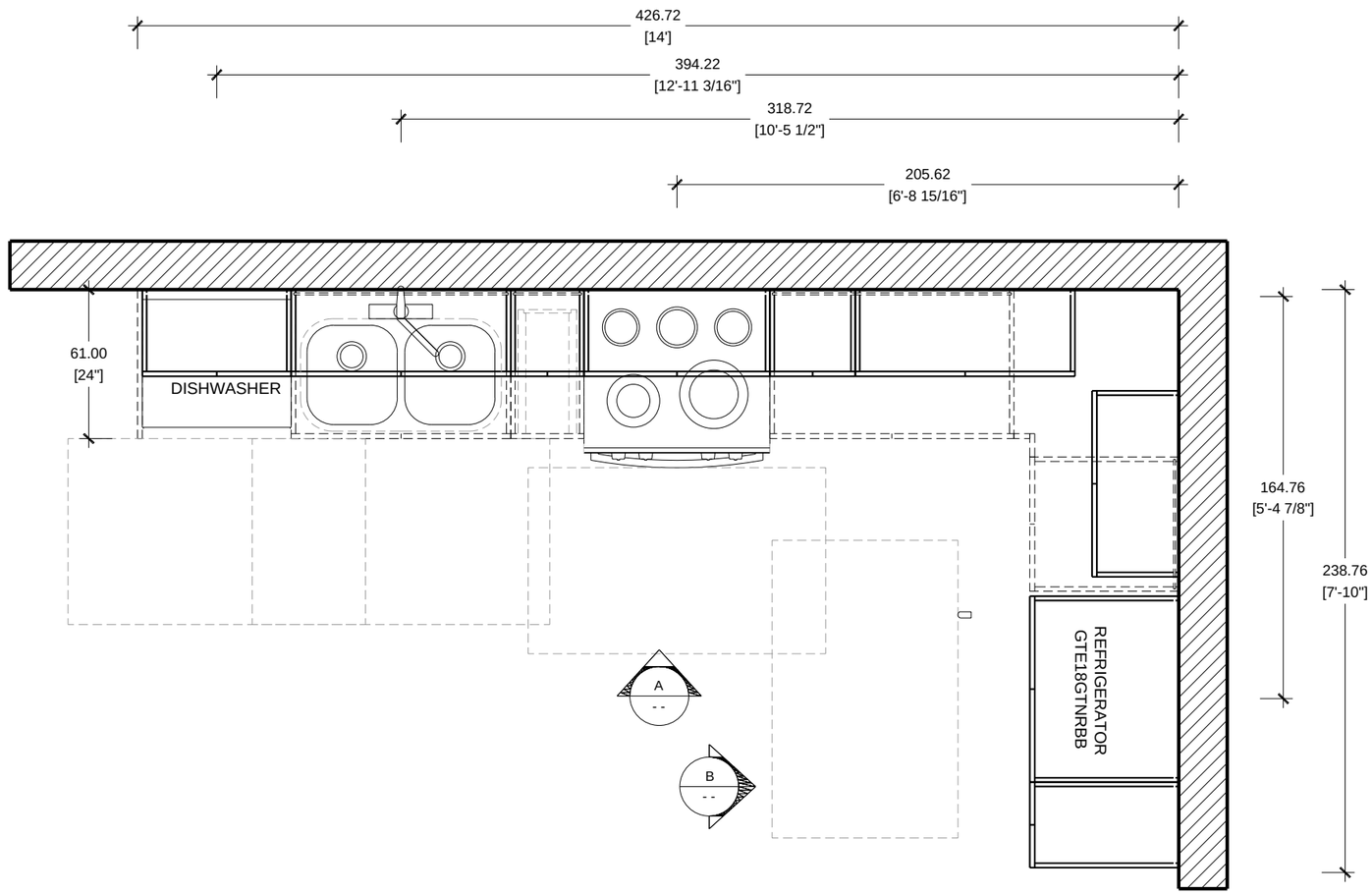

FLOOR PLAN SCALE 1/2"=1'-0"

CASA FAMILIA UNIT A1 / KITCHEN TYPE K1

A.1
SHEET NUMBER

DATE:
REV:
DIMENSIONS
DRAWN BY:

PROJECT #:

CASA FAMILIA
KITCHEN | VANITIES

ITALIAN KITCHEN AND BATH
kitchen | bath | tile | closet
1777 NW 72TH AVE. MIAMI FL. 33126
T. 305.599.9000 F. 305.599.9870

KITCHEN TYPE K
UNIT A1

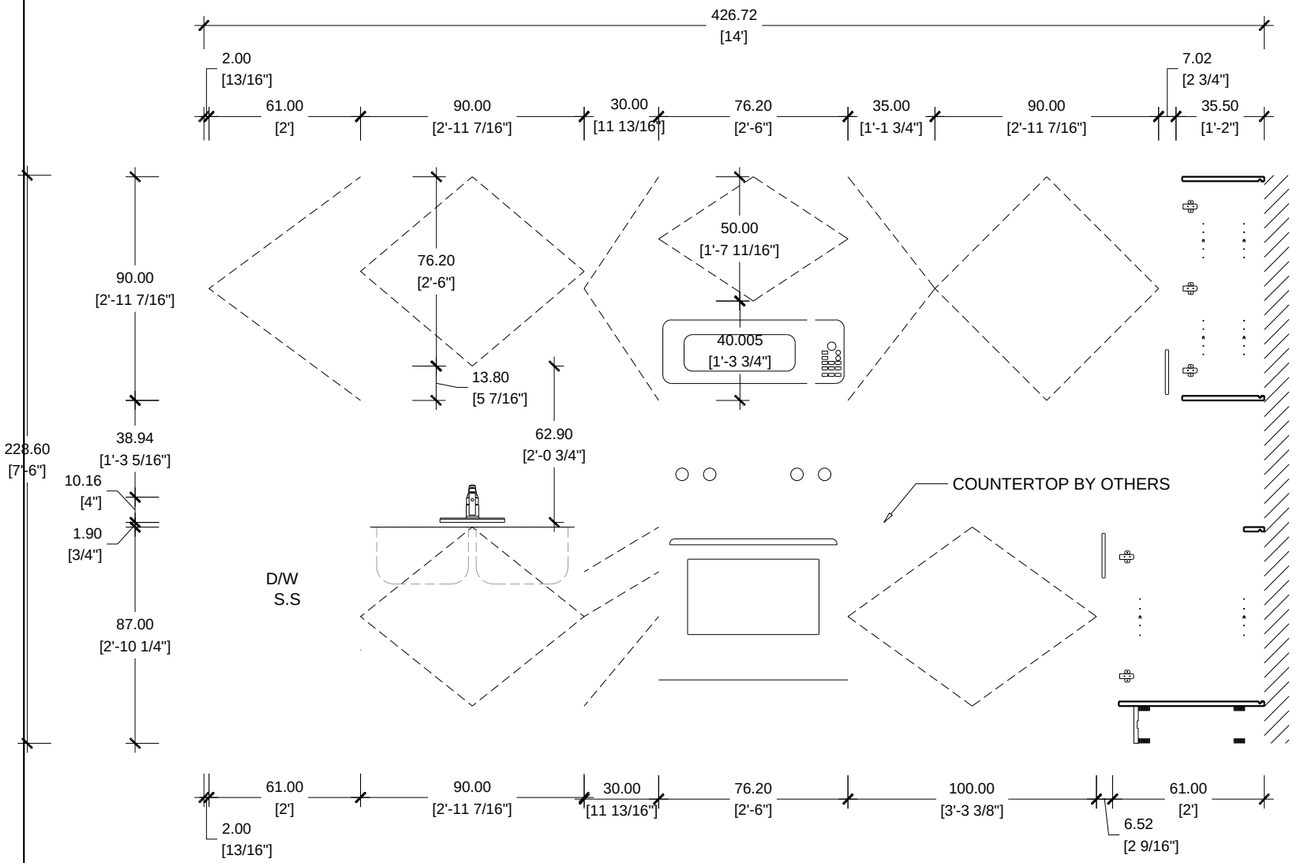

ELEVATION A
CASA FAMILIA UNIT A1 / KITCHEN TYPE K1

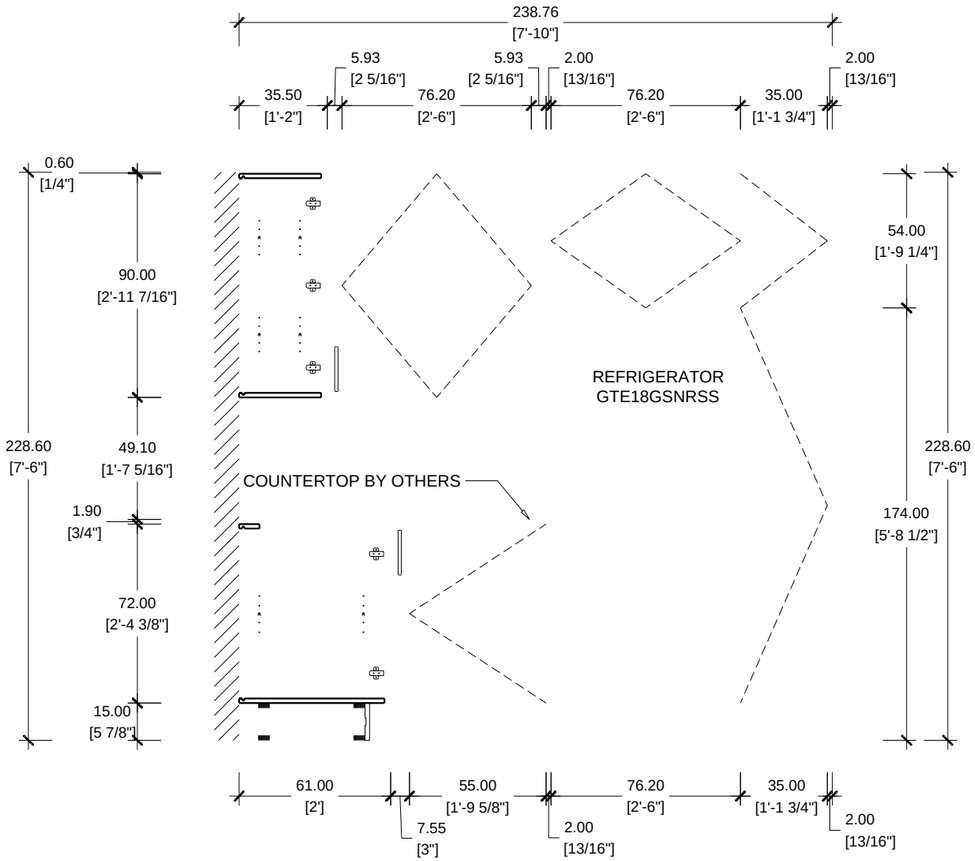

ELEVATION B
CASA FAMILIA UNIT A1 / KITCHEN TYPE K1

A.2
SHEET NUMBER

DATE:
REV:
DIMENSIONS
DRAWN BY:

PROJECT #:

CASA FAMILIA
KITCHEN | VANITIES

ITALIAN KITCHEN AND BATH
kitchen | bath | tile | closet
1777 NW 72TH AVE. MIAMI FL, 33126
T. 305.599.9000 F. 305.599.9870

VANITY TYPE V
UNIT A1

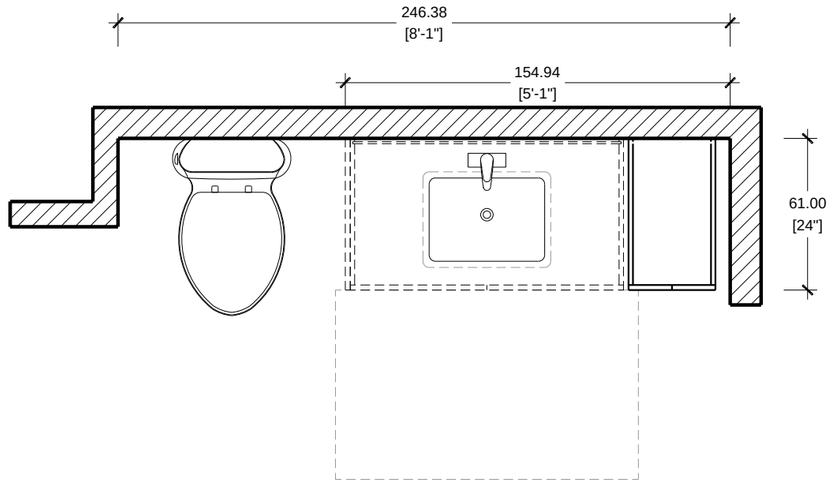

FLOOR PLAN SCALE 1/2"=1'-0"

CASA FAMILIA UNIT A1 /VANITY TYPE V1

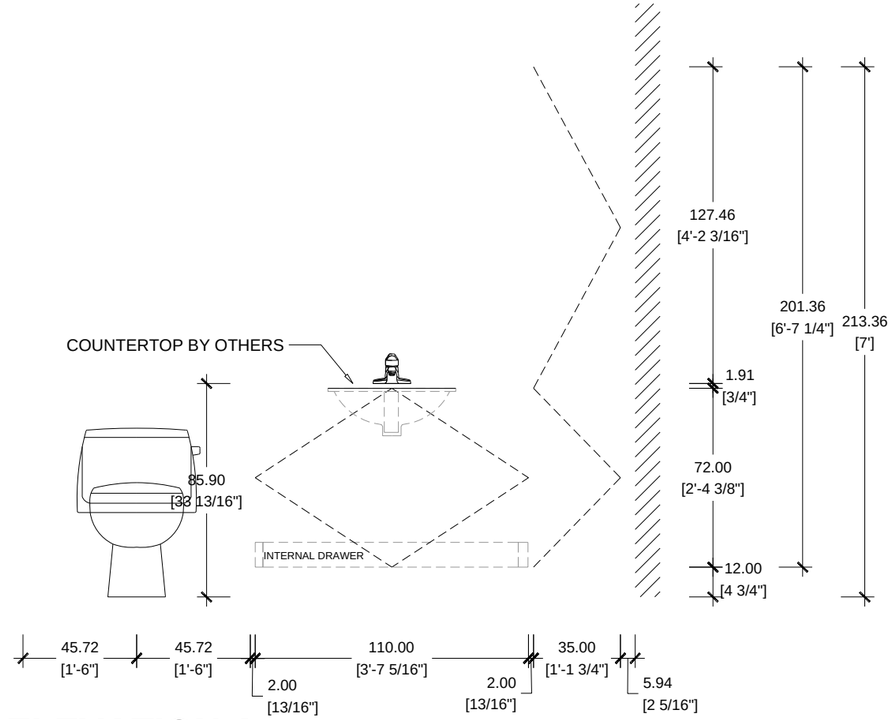

ELEVATION A

CASA FAMILIA UNIT A1 / VANITY TYPE V1

A.3

SHEET NUMBER

DATE:
REV:
DIMENSION:
DRAWN BY:

PROJECT #:

CASA FAMILIA
KITCHEN | VANITIES

ITALIAN KITCHEN AND BATH
kitchen | bath | tile | closet
1777 NW 72TH AVE. MIAMI FL, 33126
T. 305.599.9000 F. 305.599.9870

KITCHEN TYPE K
UNIT A2 FA

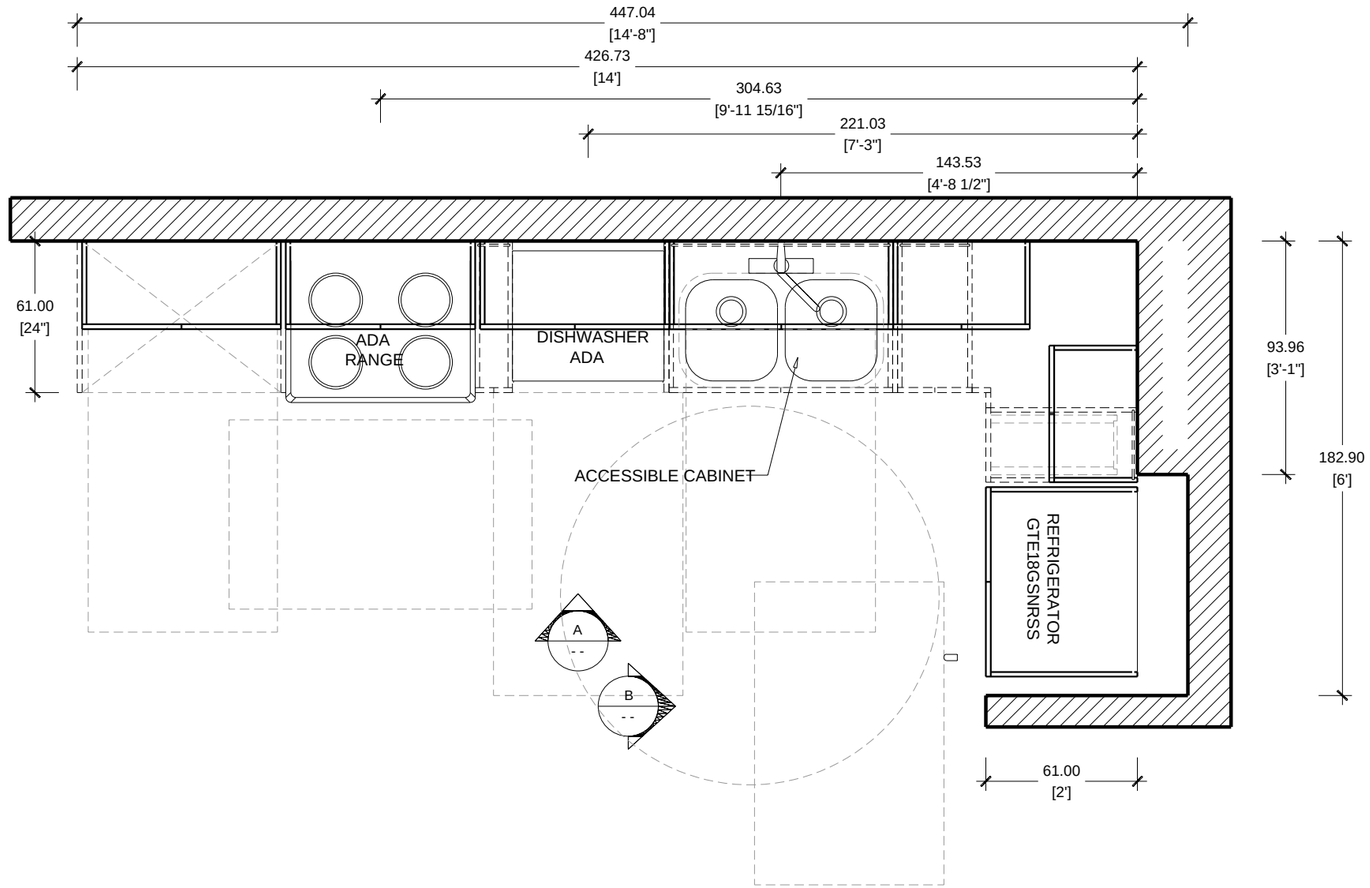

FLOOR PLAN SCALE 1/2"=1'-0"

CASA FAMILIA UNIT A2 FA / KITCHEN TYPE K2 ADA

A.4
SHEET NUMBER

DATE:
REV:
DIMENSION:
DRAWN BY:

PROJECT #:

CASA FAMILIA
KITCHEN | VANITIES

ITALIAN KITCHEN AND BATH

kitchen | bath | tile | closet

1777 NW 72TH AVE. MIAMI FL, 33126

T. 305.599.9000 F. 305.599.9870

KITCHEN TYPE K

UNIT A2 FA

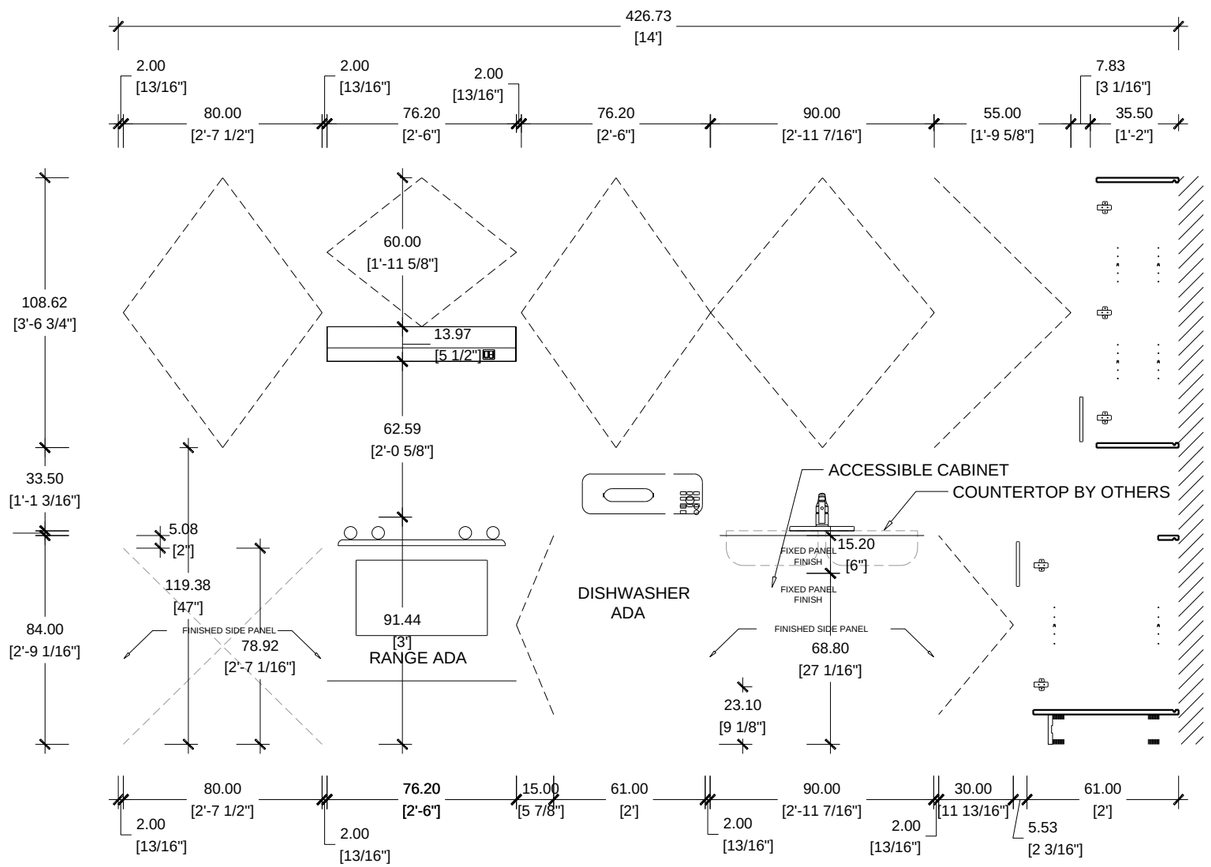

ELEVATION A

CASA FAMILIA UNIT A2 FA / KITCHEN TYPE K2 ADA

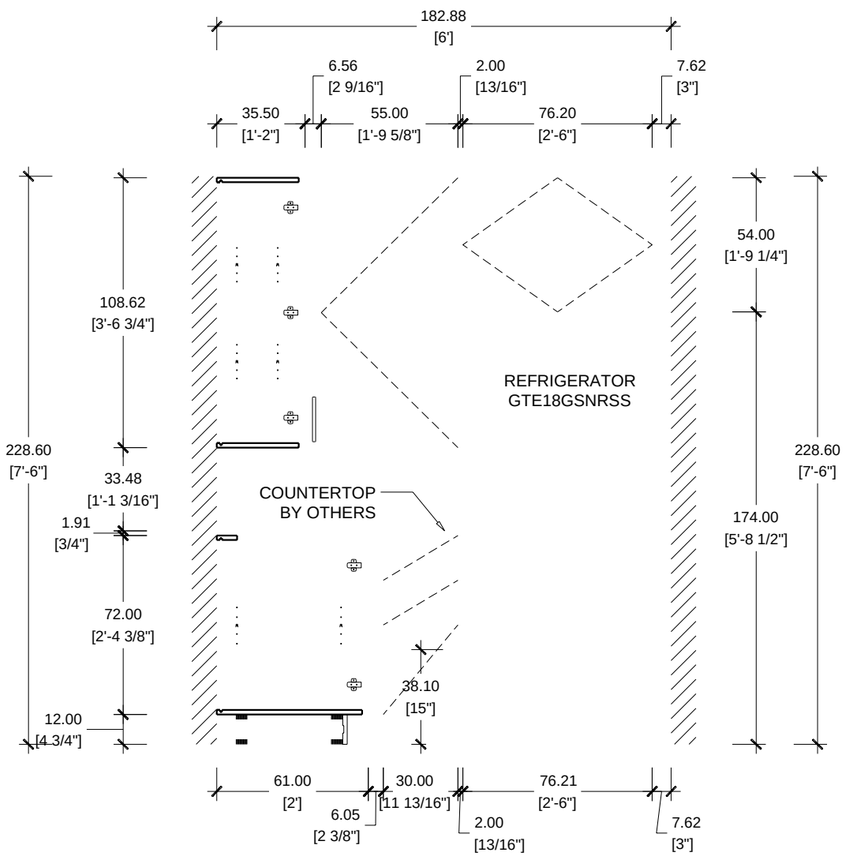

ELEVATION B

CASA FAMILIA UNIT A2 FA / KITCHEN TYPE K2 ADA

ITALIAN KITCHEN AND BATH

kitchen | bath | tile | closet

1777 NW 72TH AVE. MIAMI FL., 33126

T. 305.599.9000 F. 305.599.9870

PROJECT #:	
	CASA FAMILIA
	KITCHEN | VANITIES
DATE:	
REV.:	
DIMENSION:	
DRAWN BY:	
SHEET NUMBER	A.5

VANITY TYPE V2
UNIT A2 FA

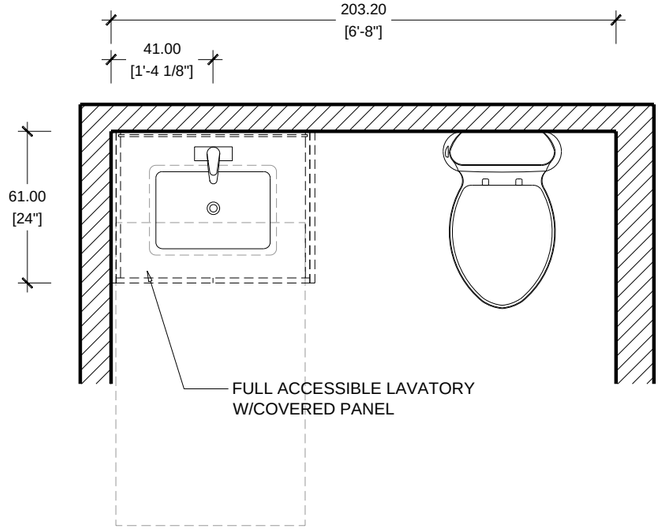

FLOOR PLAN SCALE 1/2"=1'-0"
CASA FAMILIA UNIT A2 FA /VANITY TYPE V2

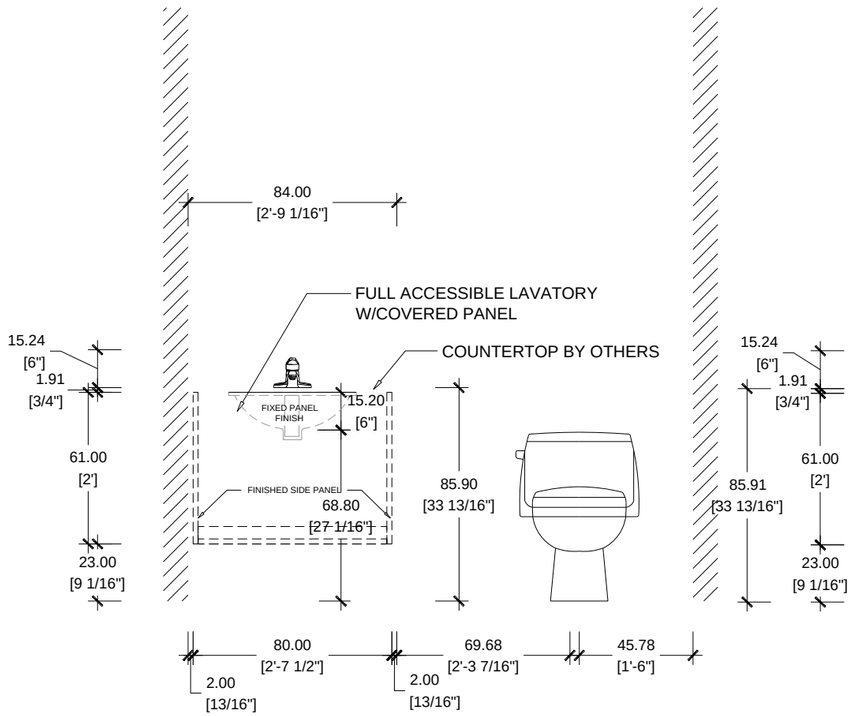

ELEVATION A
CASA FAMILIA UNIT A2 FA / VANITY TYPE V2

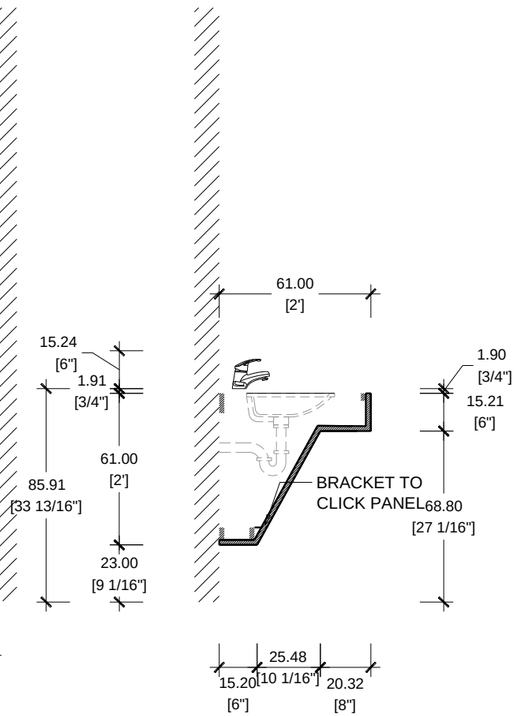

SECTION SCALE 1/2"=1'-0"
CASA FAMILIA UNIT A2 FA/ VANITY TYPE V2

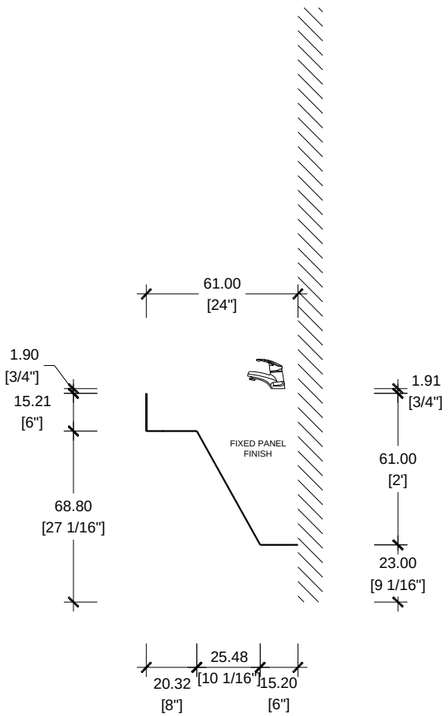

SIDE VIEW SCALE 1/2"=1'-0"
CASA FAMILIA / VANITY TYPE V2

A.6
SHEET NUMBER

DATE:
REV:
DIMENSIONS
DRAWN BY:

PROJECT #:
CASA FAMILIA
KITCHEN | VANITIES

ITALIAN KITCHEN AND BATH
kitchen | bath | tile | closet
1777 NW 72TH AVE. MIAMI FL, 33126
T. 305.599.9000 F. 305.599.9870

KITCHEN TYPE K1
UNIT A3

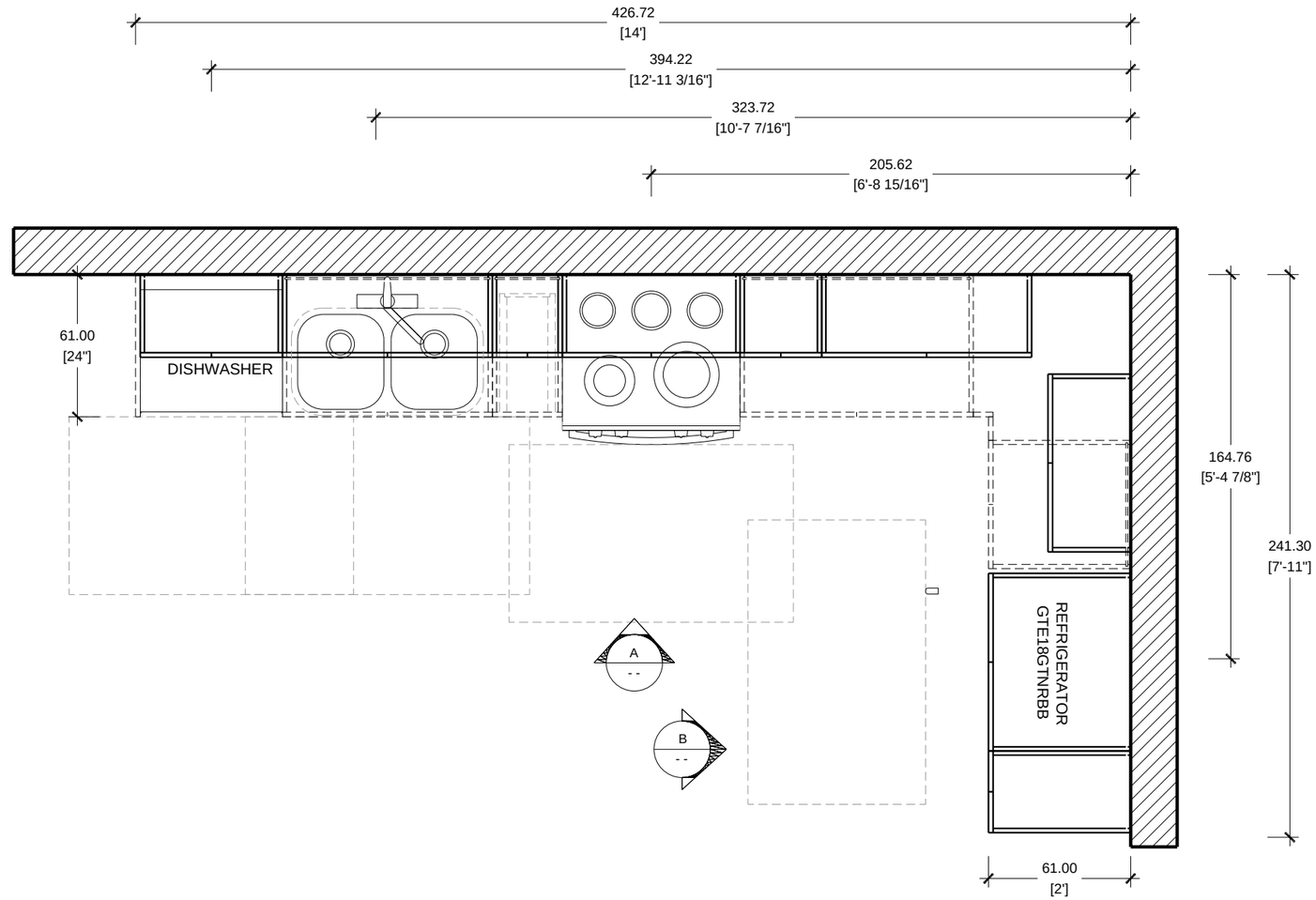

FLOOR PLAN SCALE 1/2"=1'-0"

CASA FAMILIA UNIT A3/ KITCHEN TYPE K1

A.7

SHEET NUMBER

DATE:

REV:

DIMENSIONS:

DRAWN BY:

PROJECT #:

CASA FAMILIA

KITCHEN | VANITIES

ITALIAN KITCHEN AND BATH

kitchen | bath | tile | closet

1777 NW 72TH AVE. MIAMI FL, 33126

T. 305.599.9000 F. 305.599.9870

KITCHEN TYPE K1
UNIT A3

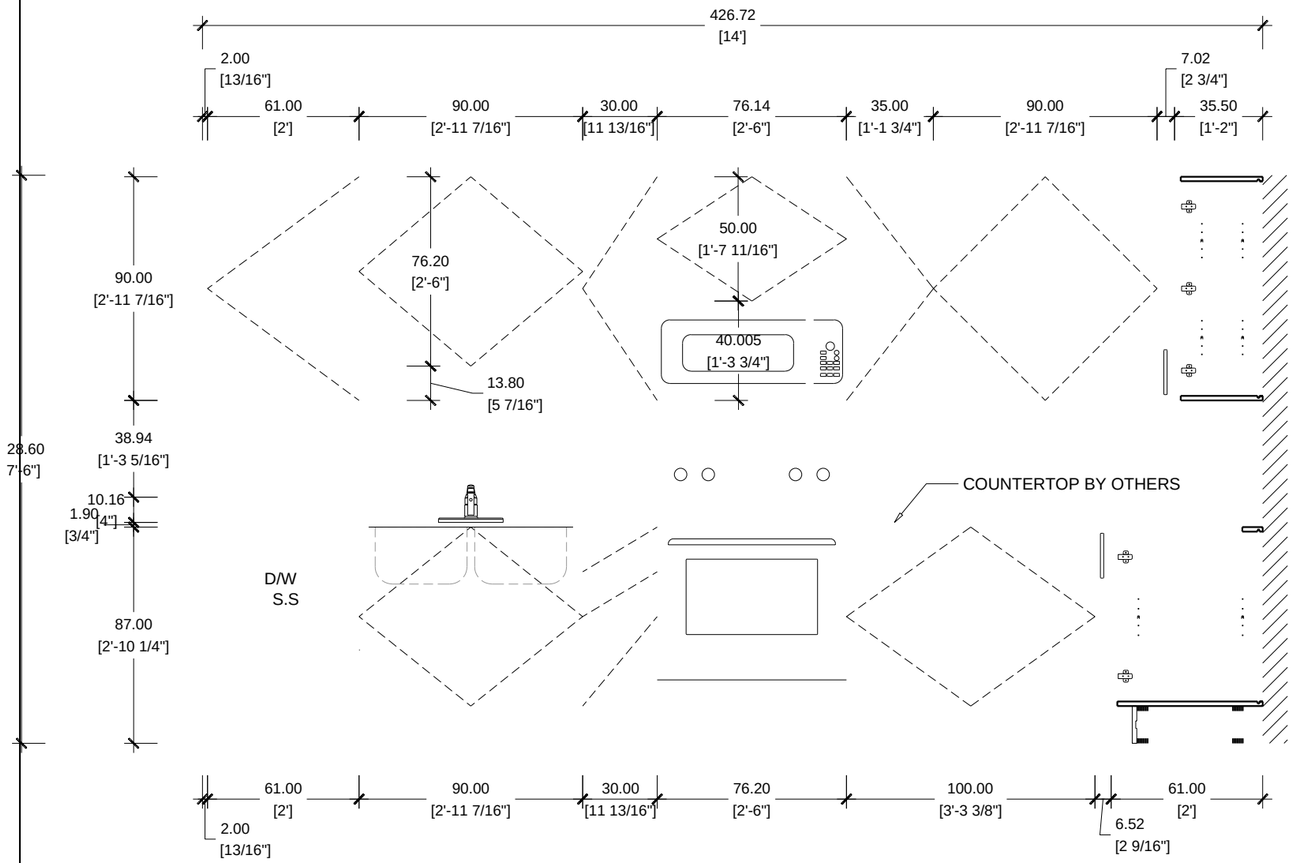

ELEVATION A
CASA FAMILIA UNIT A3 / KITCHEN TYPE K1

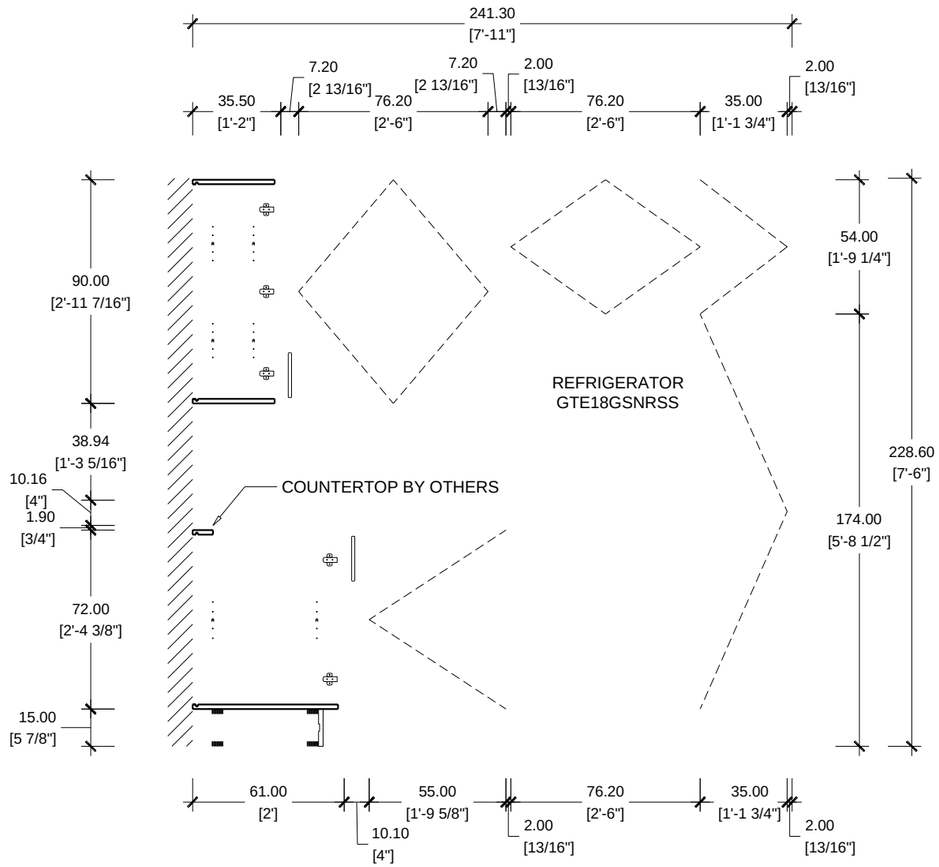

ELEVATION B
CASA FAMILIA UNIT A3 / KITCHEN TYPE K1

A.8
SHEET NUMBER

DATE:
REV:
DIMENSION:
DRAWN BY:

PROJECT #:

CASA FAMILIA
KITCHEN | VANITIES

ITALIAN KITCHEN AND BATH
kitchen | bath | tile | closet
1777 NW 72TH AVE. MIAMI FL, 33126
T. 305.599.9000 F. 305.599.9870

VANITY TYPE V3

UNIT A3

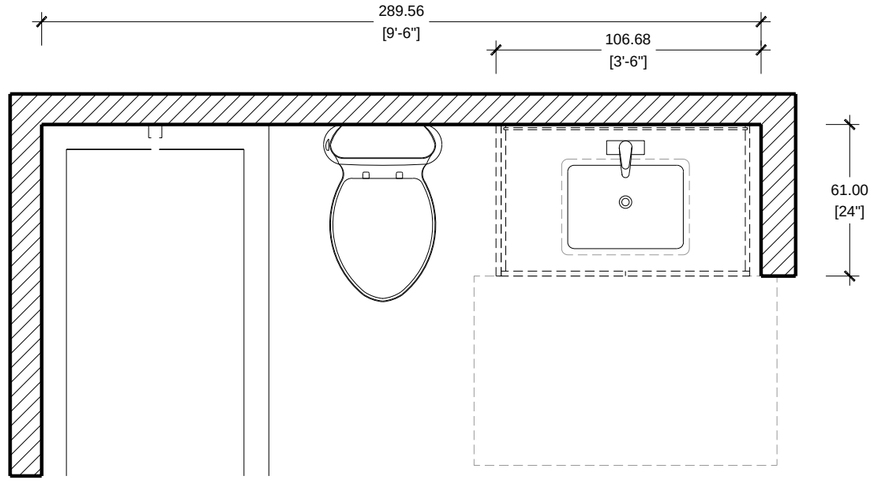

FLOOR PLAN SCALE 1/2"=1'-0"

CASA FAMILIA /VANITY TYPE V3

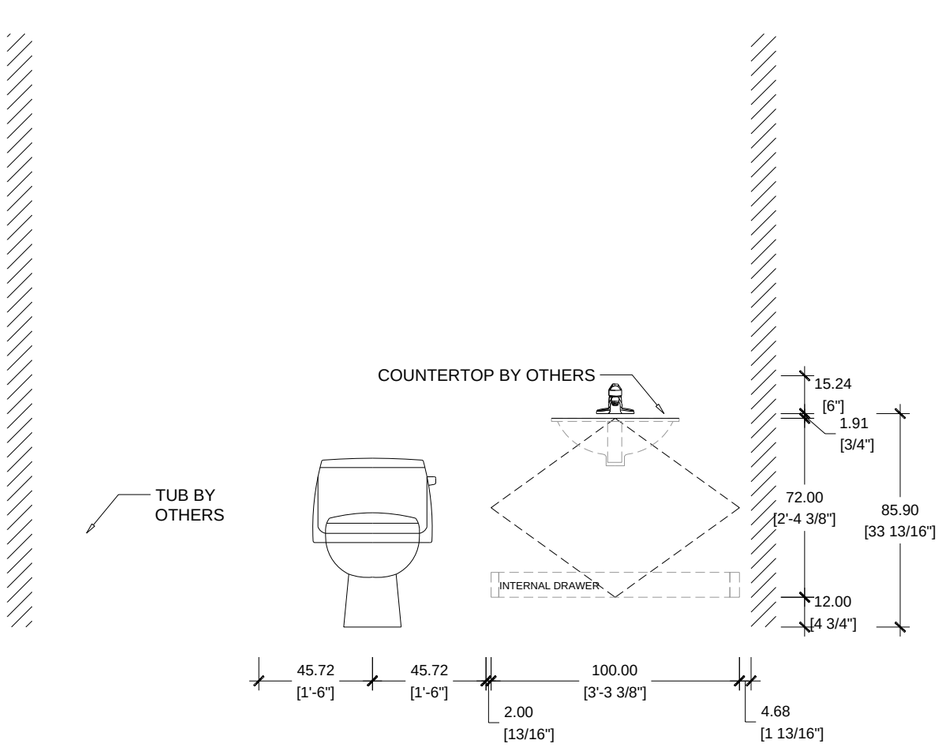

ELEVATION A

CASA FAMILIA UNIT A3 / VANITY TYPE V3

A.9

SHEET NUMBER

DATE:

REV:

DIMENSION:

DRAWN BY:

PROJECT #:

CASA FAMILIA

KITCHEN | VANITIES

ITALIAN KITCHEN AND BATH

kitchen | bath | tile | closet

1777 NW 72TH AVE. MIAMI FL, 33126

T. 305.599.9000 F. 305.599.9870

KITCHEN TYPE K
UNIT B1

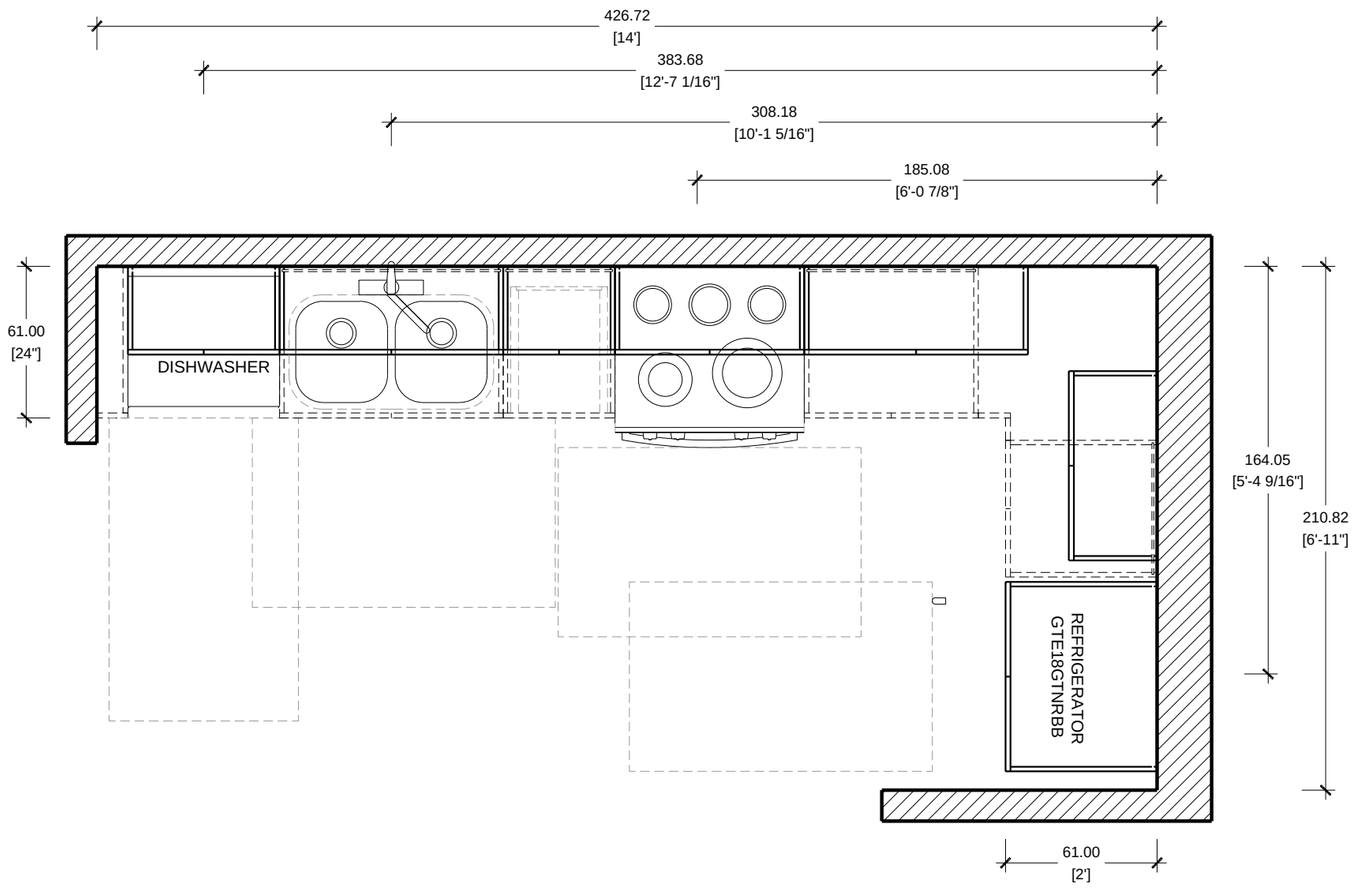

FLOOR PLAN SCALE 1/2"=1'-0"

CASA FAMILIA UNIT B1/ KITCHEN TYPE K3

A.10

SHEET NUMBER

DATE:

REV:

DIMENSIONS

DRAWN BY:

PROJECT #:

CASA FAMILIA

KITCHEN | VANITIES

ITALIAN KITCHEN AND BATH

kitchen | bath | tile | closet

1777 NW 72TH AVE. MIAMI FL. 33126

T. 305.599.9000 F. 305.599.9870

KITCHEN TYPE K
UNIT B1

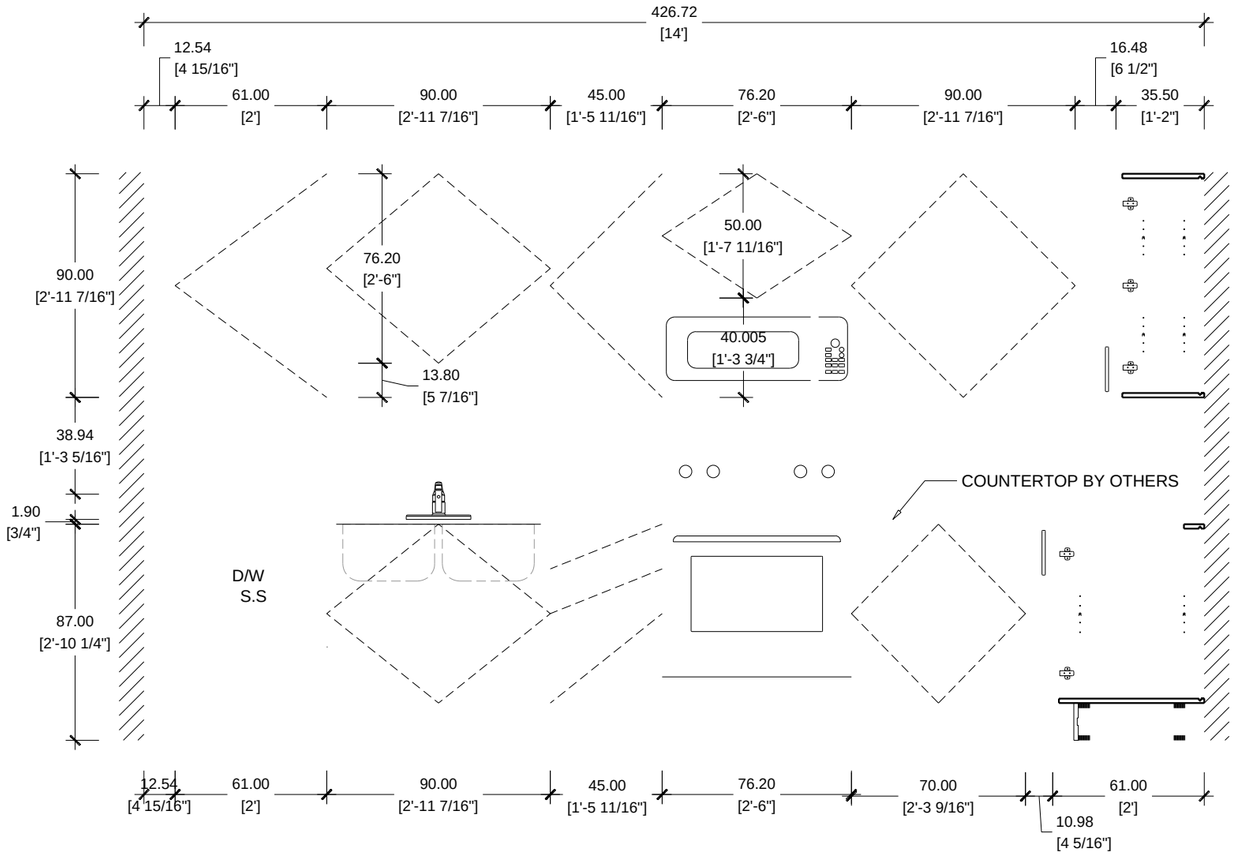

ELEVATION A
CASA FAMILIA UNIT B1 / KITCHEN TYPE K3

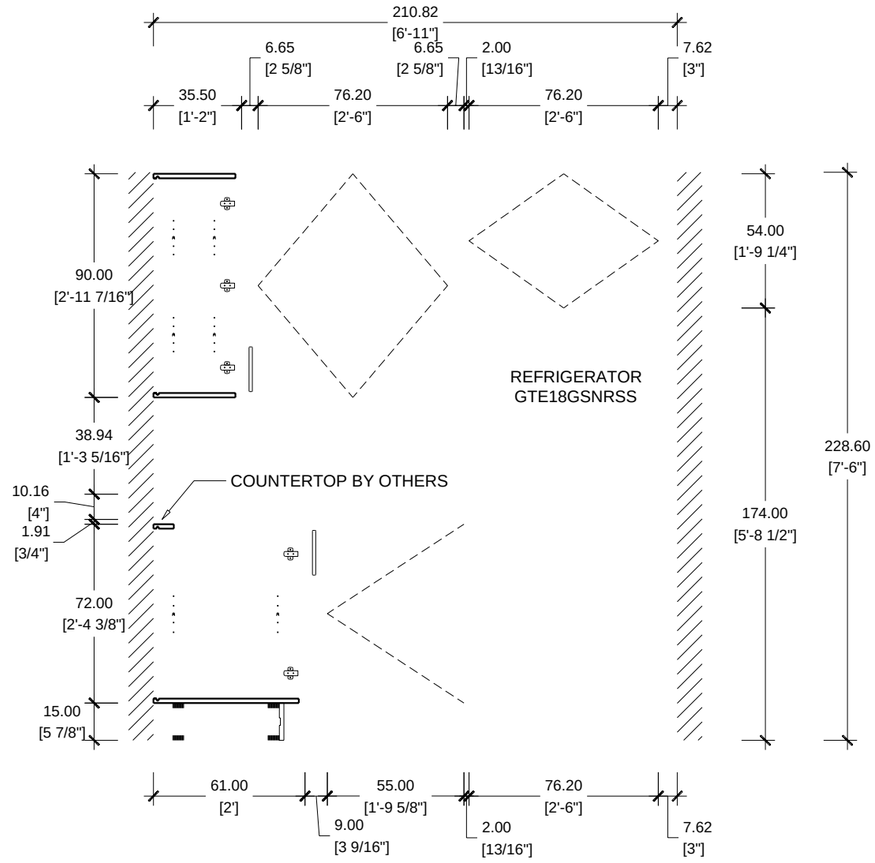

ELEVATION B
CASA FAMILIA UNIT B1 / KITCHEN TYPE K3

A.11
SHEET NUMBER

DATE:
REV:
DIMENSIONS
DRAWN BY:

PROJECT #:

CASA FAMILIA
KITCHEN | VANITIES

ITALIAN KITCHEN AND BATH
kitchen | bath | tile | closet
1777 NW 72TH AVE. MIAMI FL, 33126
T. 305.599.9000 F. 305.599.9870

VANITIES
UNIT B1

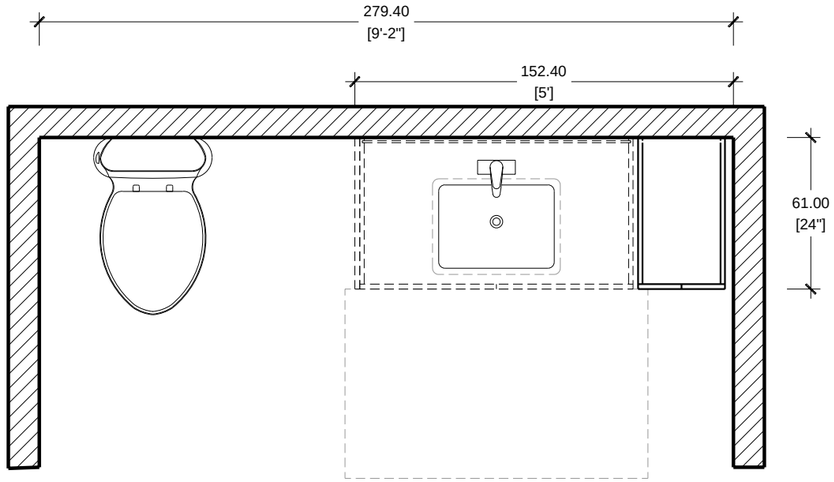

FLOOR PLAN SCALE 1/2"=1'-0"
CASA FAMILIA UNIT B1 /VANITY TYPE V1

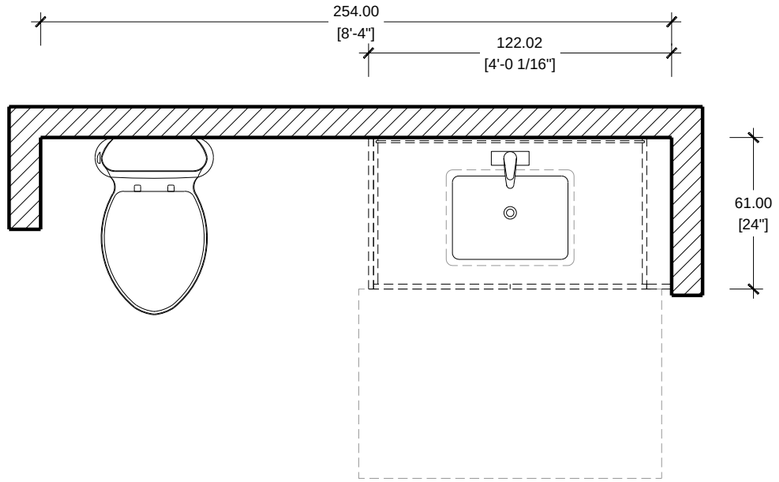

FLOOR PLAN SCALE 1/2"=1'-0"
CASA FAMILIA /VANITY TYPE V4

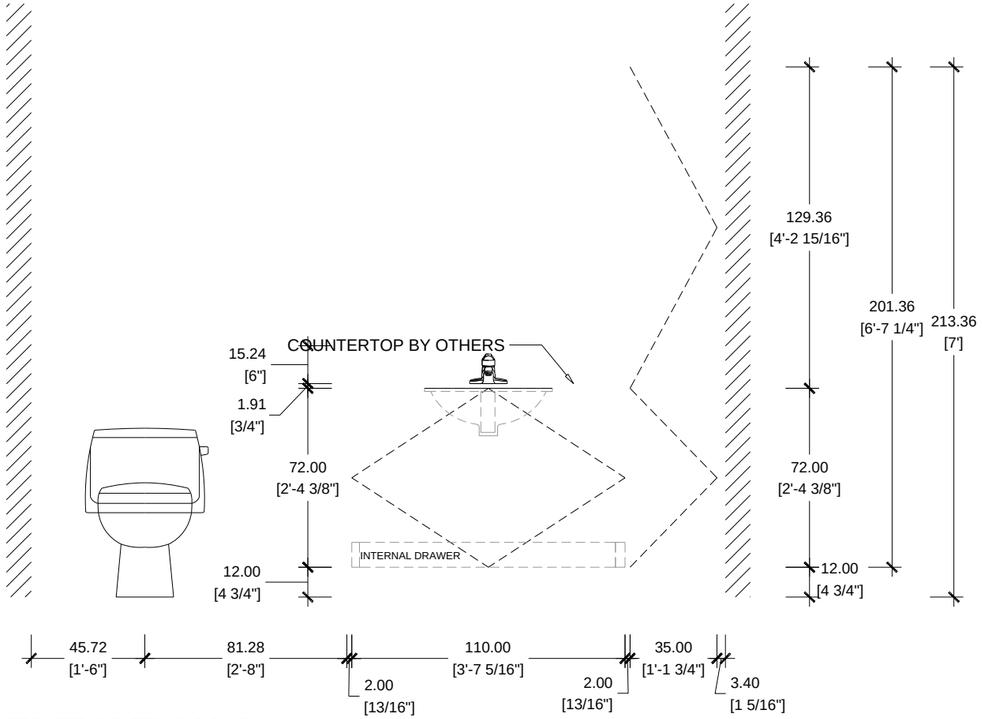

ELEVATION A
CASA FAMILIA UNIT B1 / VANITY TYPE V1

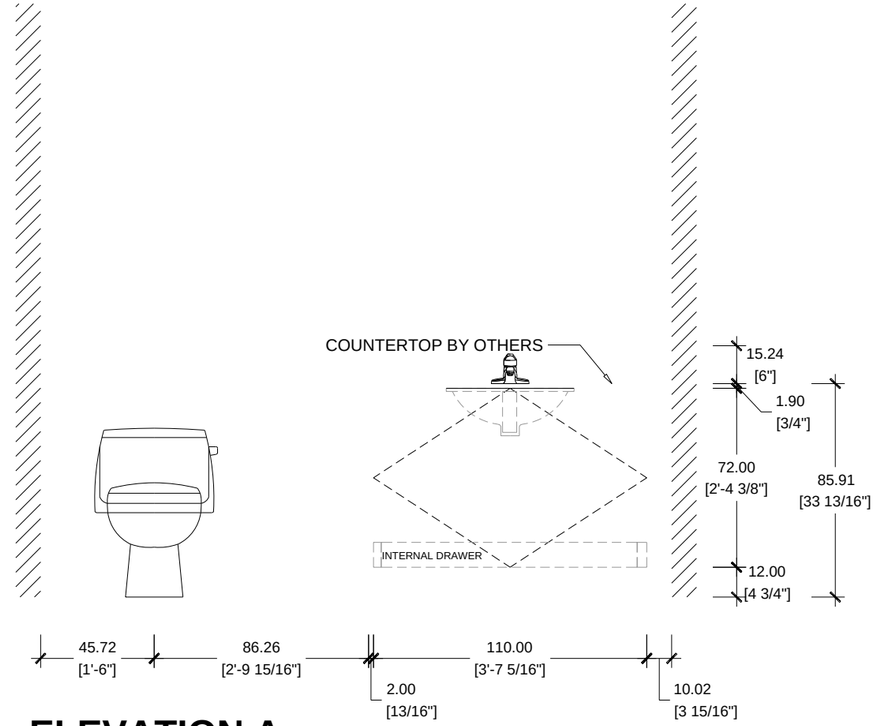

ELEVATION A
CASA FAMILIA UNIT B1 / VANITY TYPE V4

A.12
SHEET NUMBER

DATE:
REV:
DIMENSIONS:
DRAWN BY:

PROJECT #:

CASA FAMILIA
KITCHEN | VANITIES

ITALIAN KITCHEN AND BATH
kitchen | bath | tile | closet
1777 NW 72TH AVE. MIAMI FL, 33126
T. 305.599.9000 F. 305.599.9870

KITCHEN TYPE K
UNIT B2FA

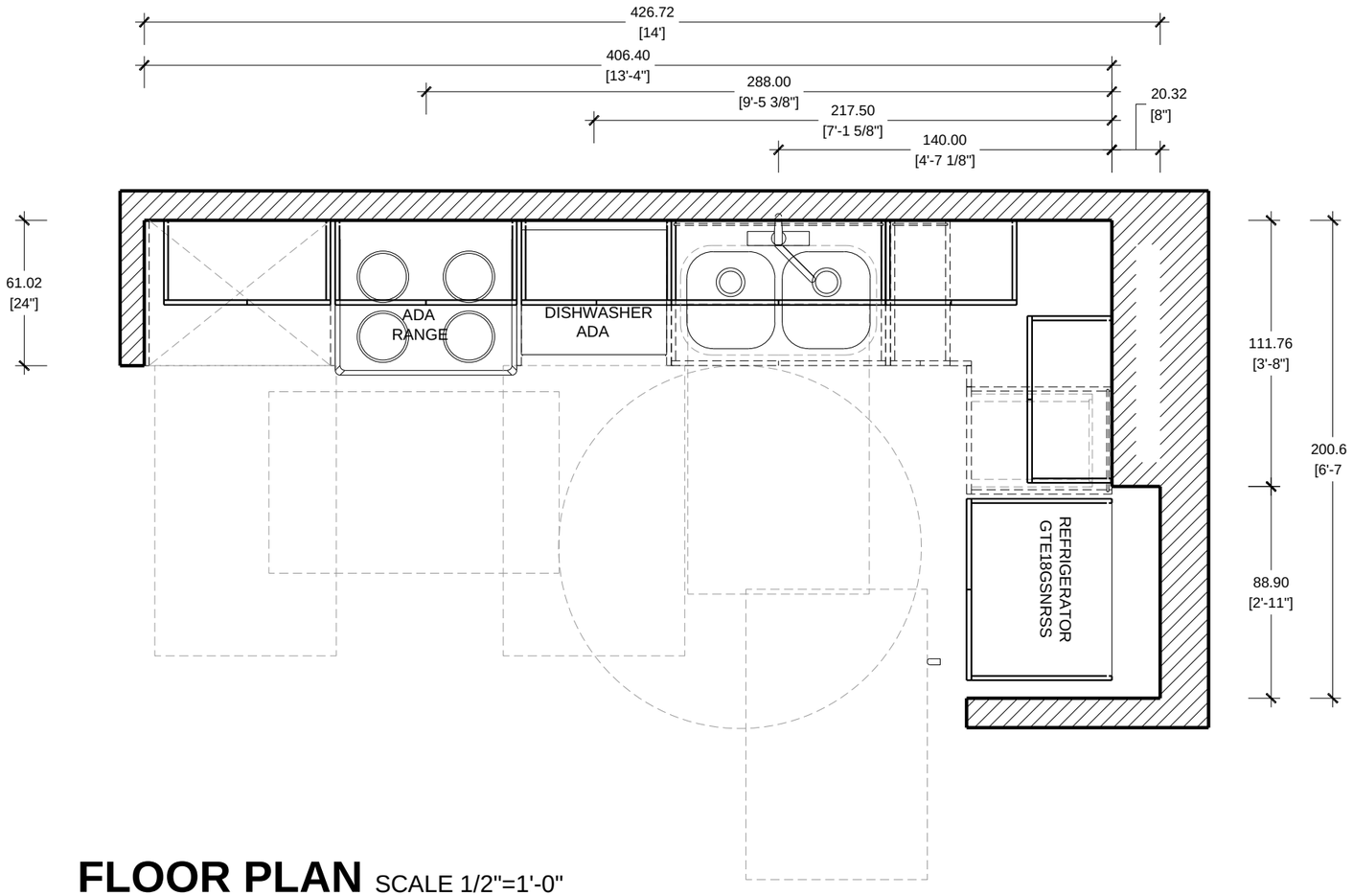

FLOOR PLAN SCALE 1/2"=1'-0"

CASA FAMILIA / KITCHEN TYPE K4 ADA

A.13

SHEET NUMBER

DATE:

REV:

DIMENSIONS

DRAWN BY:

PROJECT #:

CASA FAMILIA

KITCHEN | VANITIES

ITALIAN KITCHEN AND BATH

kitchen | bath | tile | closet

1777 NW 72TH AVE. MIAMI FL. 33126

T. 305.599.9000 F. 305.599.9870

KITCHEN TYPE K
UNIT B2FA

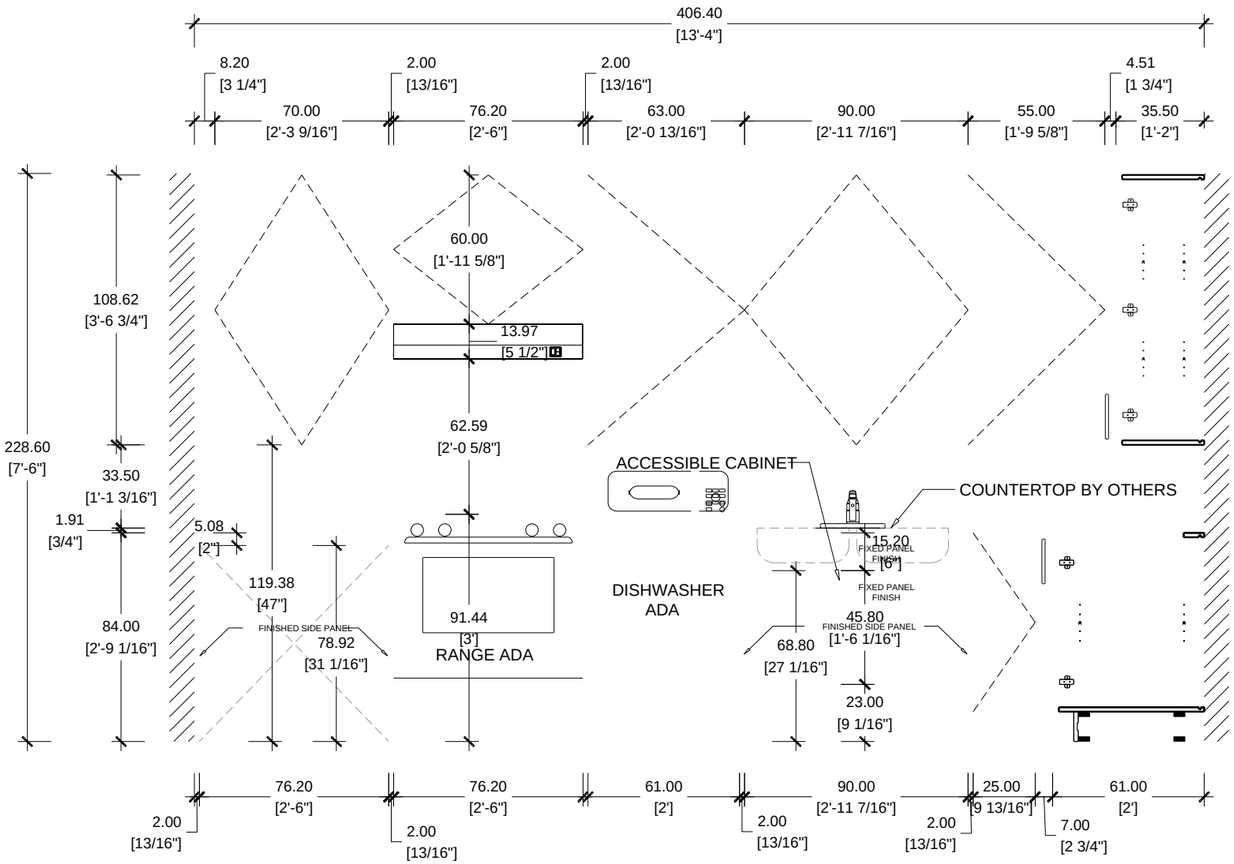

ELEVATION A
CASA FAMILIA UNIT B1 FA / KITCHEN TYPE K4 ADA

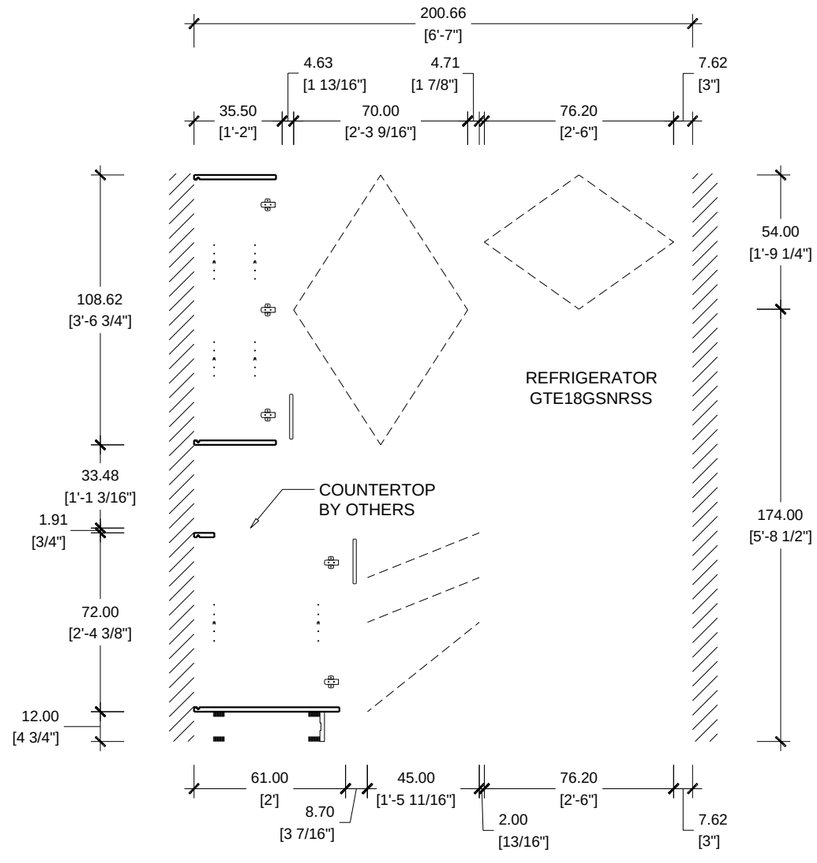

ELEVATION B
CASA FAMILIA UNIT B1 FA / KITCHEN TYPE K4 ADA

SHEET NUMBER:	A.14
DRAWN BY:	
DIMENSION:	
REV:	
DATE:	
PROJECT #:	

CASA FAMILIA
KITCHEN | VANITIES

ITALIAN KITCHEN AND BATH
kitchen | bath | tile | closet
1777 NW 72TH AVE. MIAMI FL, 33126
T. 305.599.9000 F. 305.599.9870

VANITY TYPE RV
UNIT B2FA

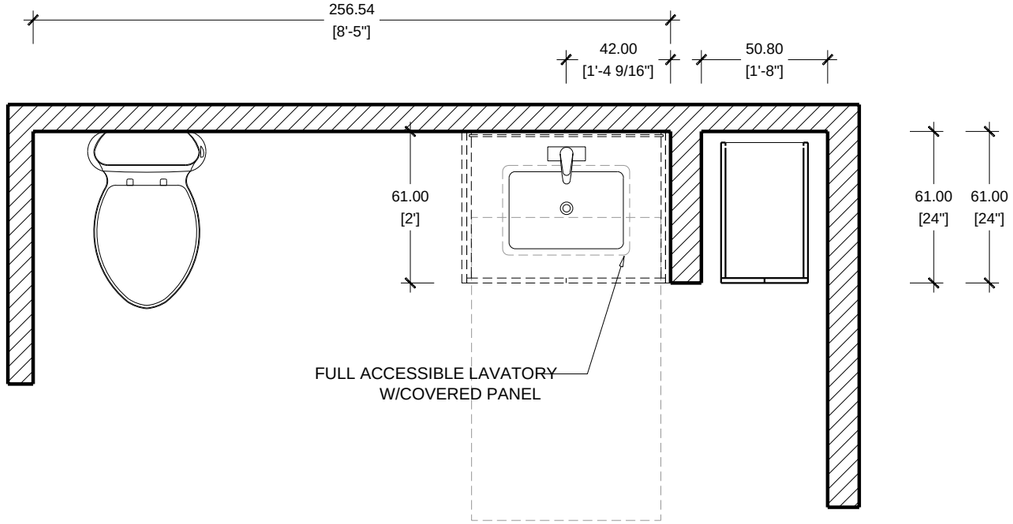

FLOOR PLAN SCALE 1/2"=1'-0"
CASA FAMILIA /VANITY TYPE RV2

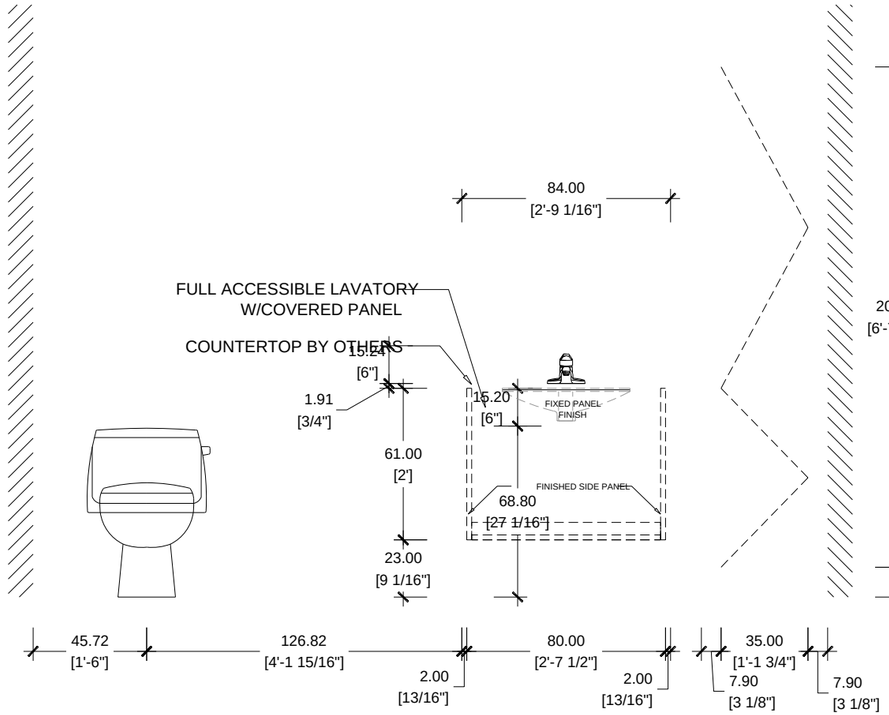

ELEVATION A
CASA FAMILIA / VANITY TYPE RV2

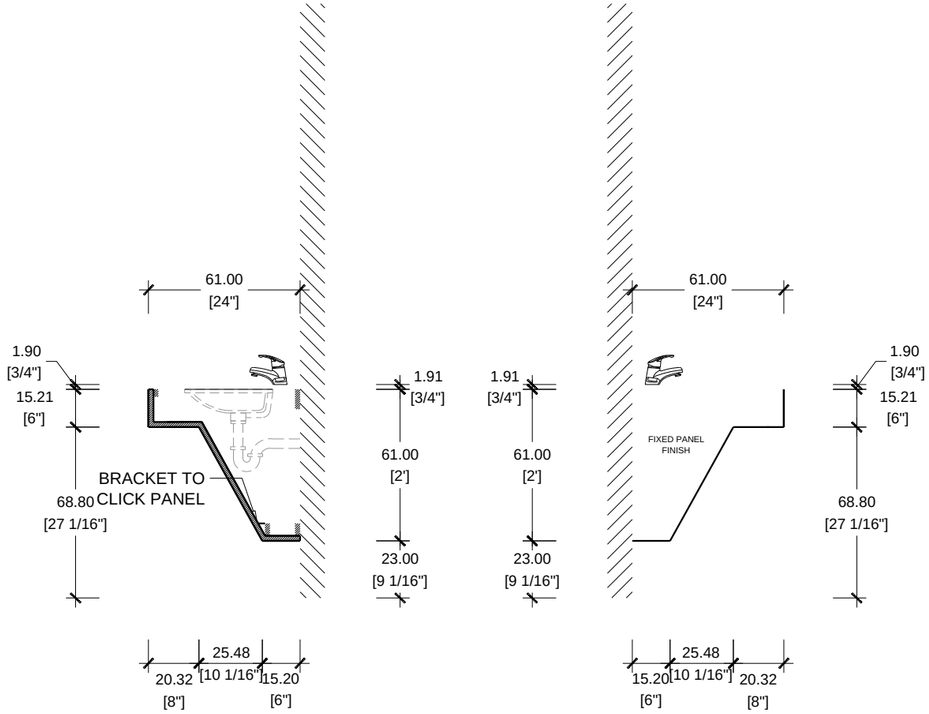

SECTION SCALE 1/2"=1'-0"
CASA FAMILIA / VANITY TYPE RV2

SIDE VIEW SCALE 1/2"=1'-0"
CASA FAMILIA / VANITY TYPE RV2

A.15
SHEET NUMBER

DATE:
REV:
DIMENSIONS
DRAWN BY:

PROJECT #:

CASA FAMILIA
KITCHEN | VANITIES

ITALIAN KITCHEN AND BATH
kitchen | bath | tile | closet
1777 NW 72TH AVE. MIAMI FL, 33126
T. 305.599.9000 F. 305.599.9870

VANITY TYPE RV
UNIT B2FA

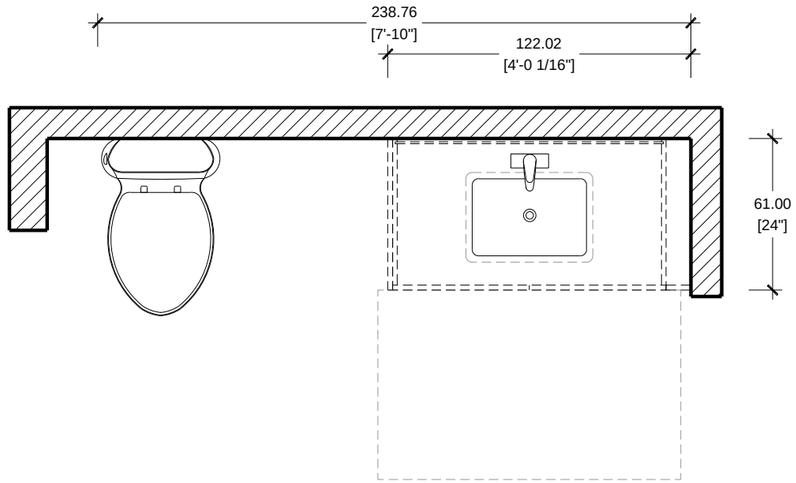

FLOOR PLAN SCALE 1/2"=1'-0"
CASA FAMILIA /VANITY TYPE V4

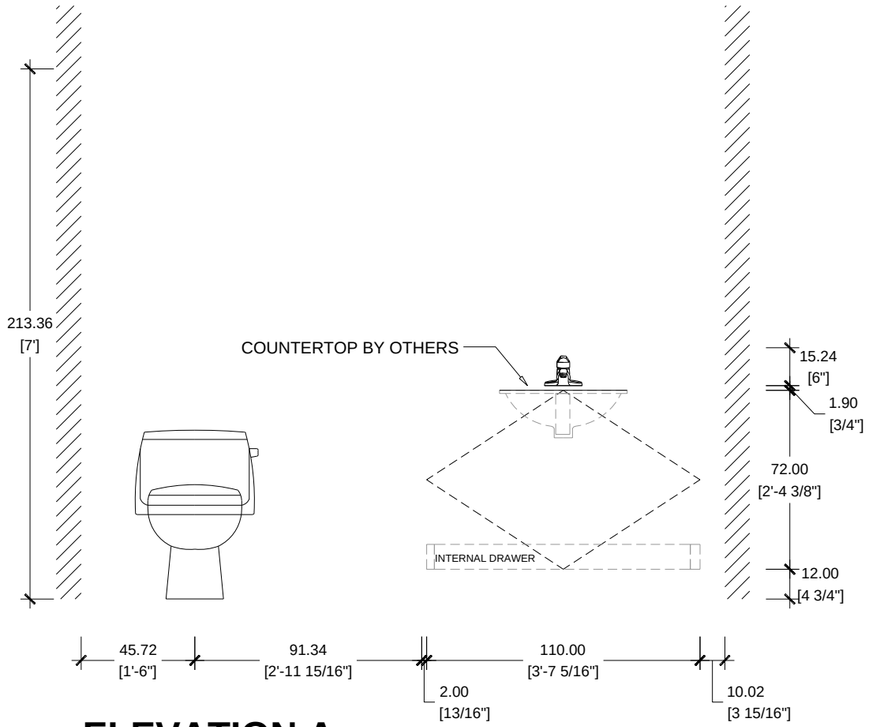

ELEVATION A
CASA FAMILIA UNIT B1 / VANITY TYPE V4

A.16
SHEET NUMBER

DATE:
REV:
DIMENSIONS
DRAWN BY:

PROJECT #:

CASA FAMILIA
KITCHEN | VANITIES

ITALIAN KITCHEN AND BATH
kitchen | bath | tile | closet
1777 NW 72TH AVE. MIAMI FL, 33126
T. 305.599.9000 F. 305.599.9870

SECTION

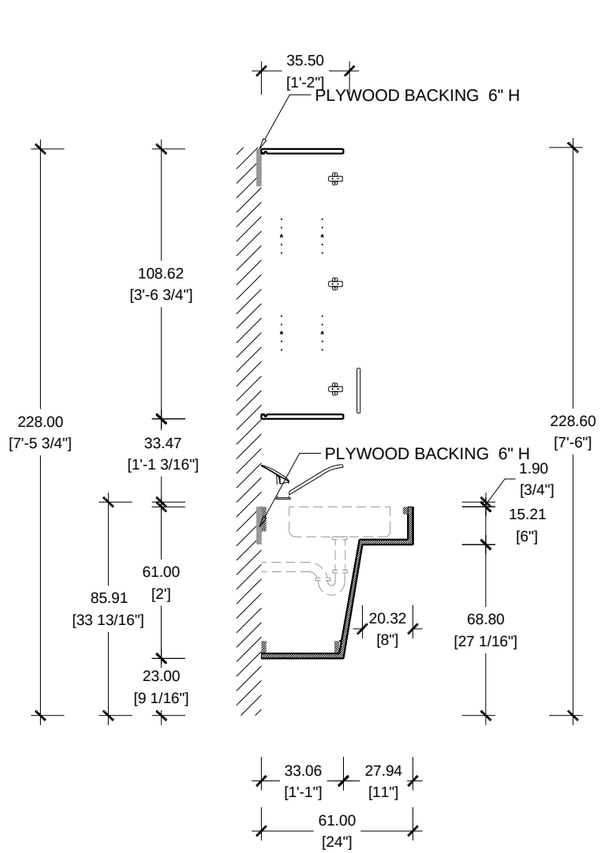

SECTION SCALE 1/2"=1'-0"
KITCHEN ADA

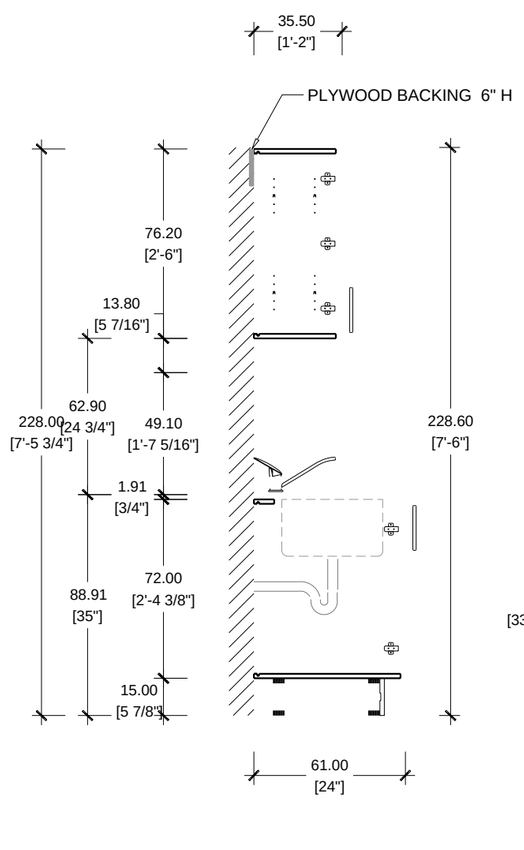

SECTION SCALE 1/2"=1'-0"
KITCHEN

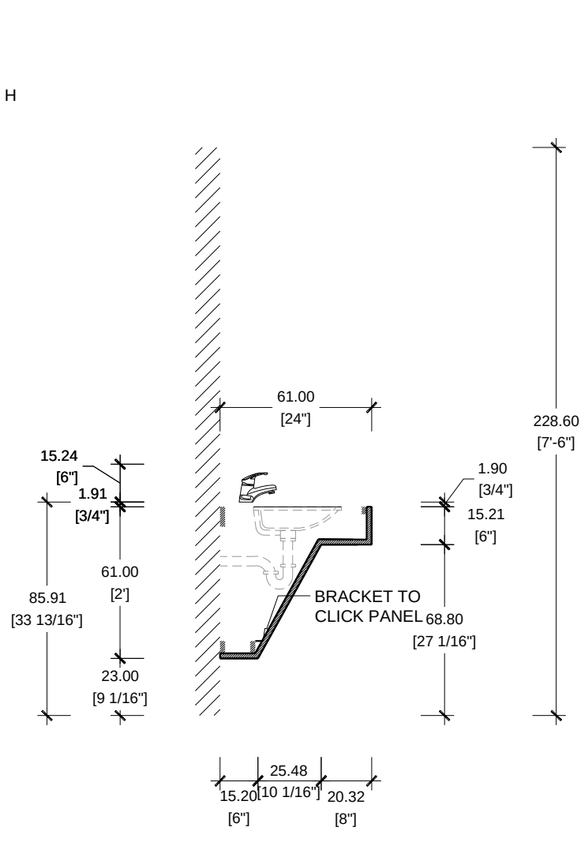

SECTION SCALE 1/2"=1'-0"
VANITY ADA

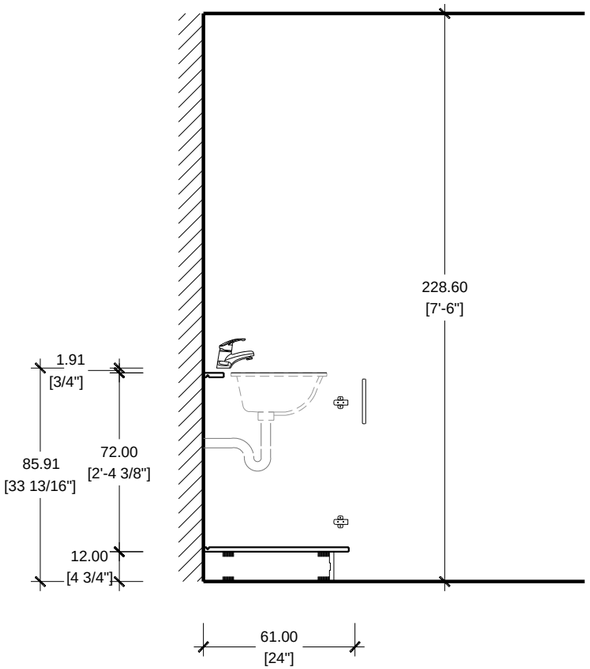

SECTION SCALE 1/2"=1'-0"
VANITY

DATE:	
REV:	
DIMENSIONS:	
DRAWN BY:	
PROJECT #:	
CASA FAMILIA	
KITCHEN | VANITIES	
SHEET NUMBER	A.17

ITALIAN KITCHEN AND BATH
kitchen | bath | tile | closet
1777 NW 72TH AVE. MIAMI FL, 33126
T. 305.599.9000 F. 305.599.9870

SECTION

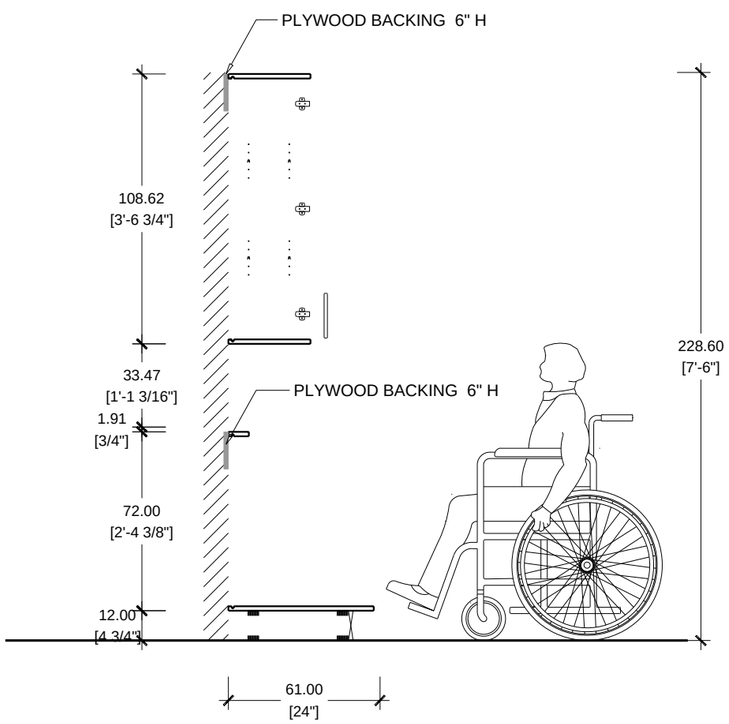

SECTION SCALE 1/2"=1'-0"
KITCHEN ADA DRAWER

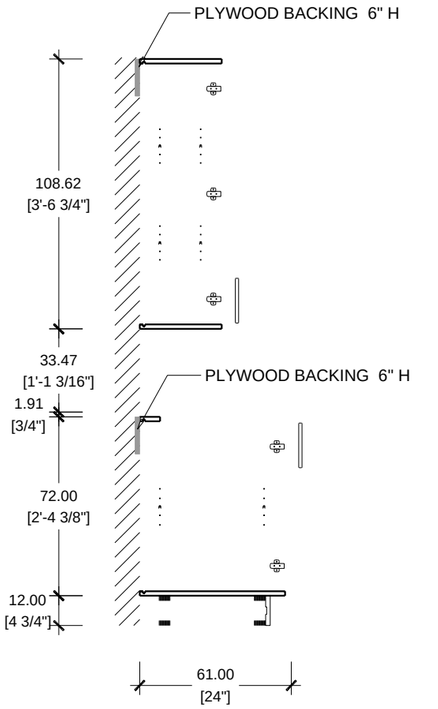

SECTION SCALE 1/2"=1'-0"
KITCHEN ADA

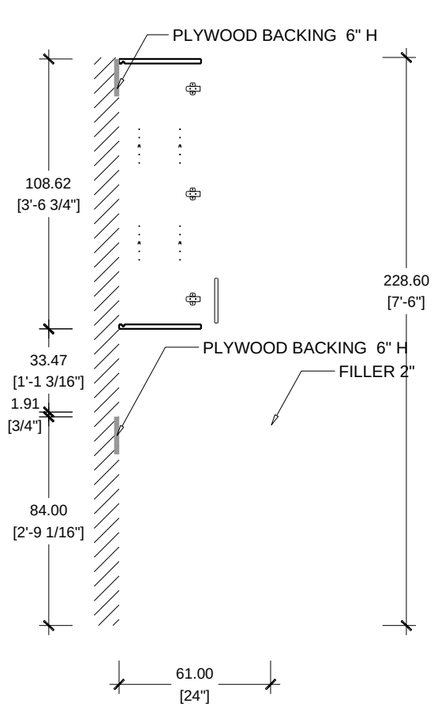

SECTION SCALE 1/2"=1'-0"
KITCHEN ADA

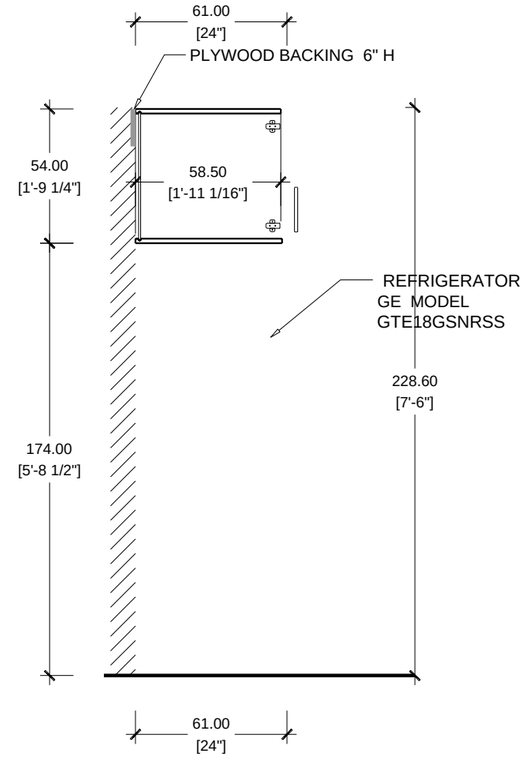

SECTION REFRIGERATOR
SCALE 1/2"=1'-0"
KITCHEN

A.18
SHEET NUMBER

DATE:
REV:
DIMENSIONS
DRAWN BY:

PROJECT #:

CASA FAMILIA
KITCHEN | VANITIES

ITALIAN KITCHEN AND BATH
kitchen | bath | tile | closet
1777 NW 72TH AVE. MIAMI FL, 33126
T. 305.599.9000 F. 305.599.9870

SECTION

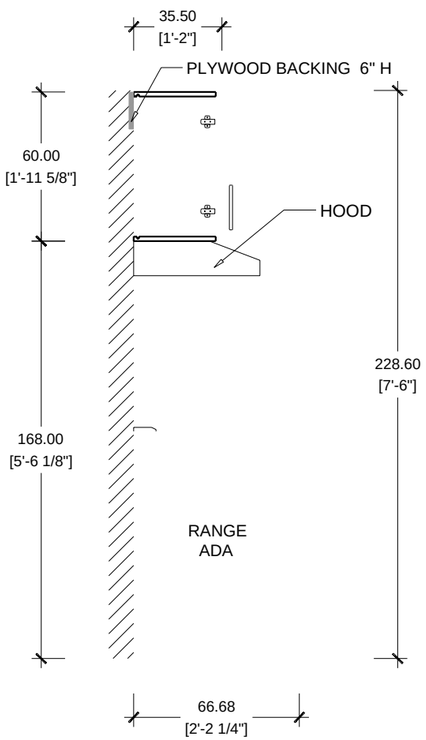

SECTION HOOD SCALE 1/2"=1'-0"
KITCHEN ADA

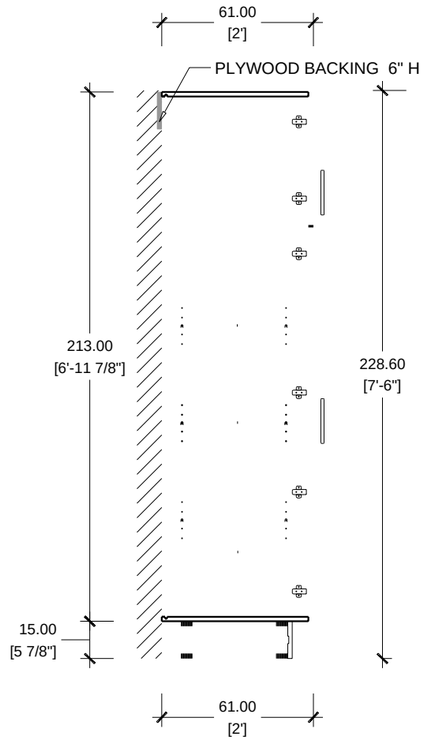

SECTION SCALE 1/2"=1'-0"
KITCHEN PANTRY

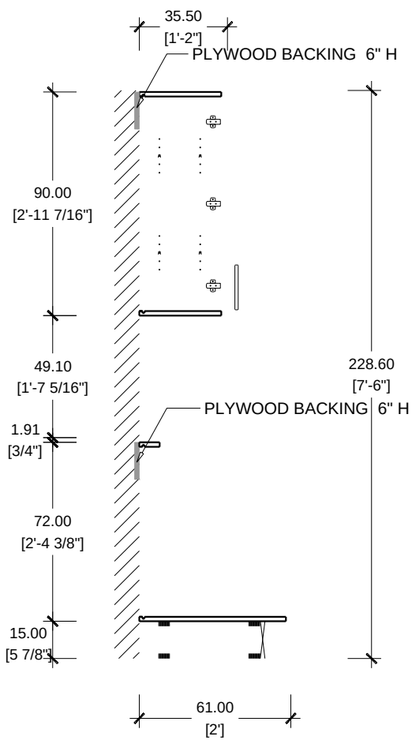

SECTION SCALE 1/2"=1'-0"
KITCHEN DRAWER

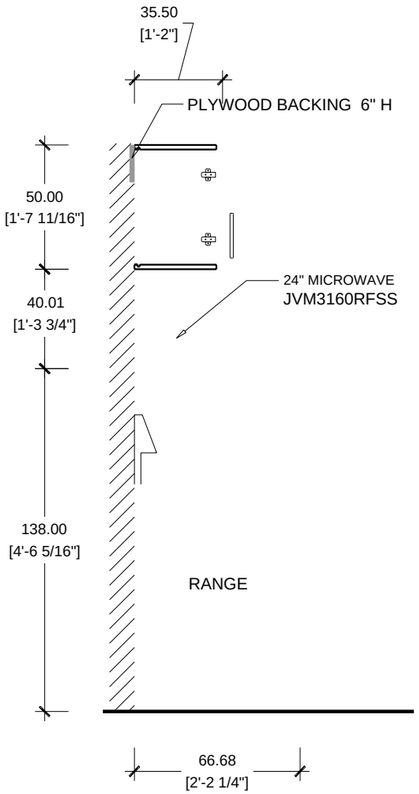

SECTION
MICROWAVE SCALE 1/2"=1'-0"
KITCHEN

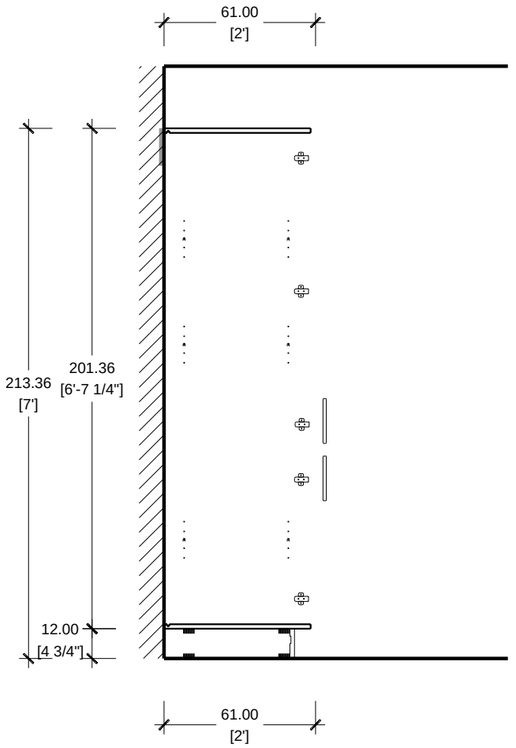

SECTION SCALE 1/2"=1'-0"
VANITY PANTRY

ITALIAN KITCHEN AND BATH
kitchen | bath | tile | closet
1777 NW 72TH AVE. MIAMI FL, 33126
T. 305.599.9000 F. 305.599.9870

DATE:	
REV:	
DIMENSIONS	
DRAWN BY:	
PROJECT #:	
CASA FAMILIA	
KITCHEN | VANITIES	
SHEET NUMBER	A.19

KITCHEN

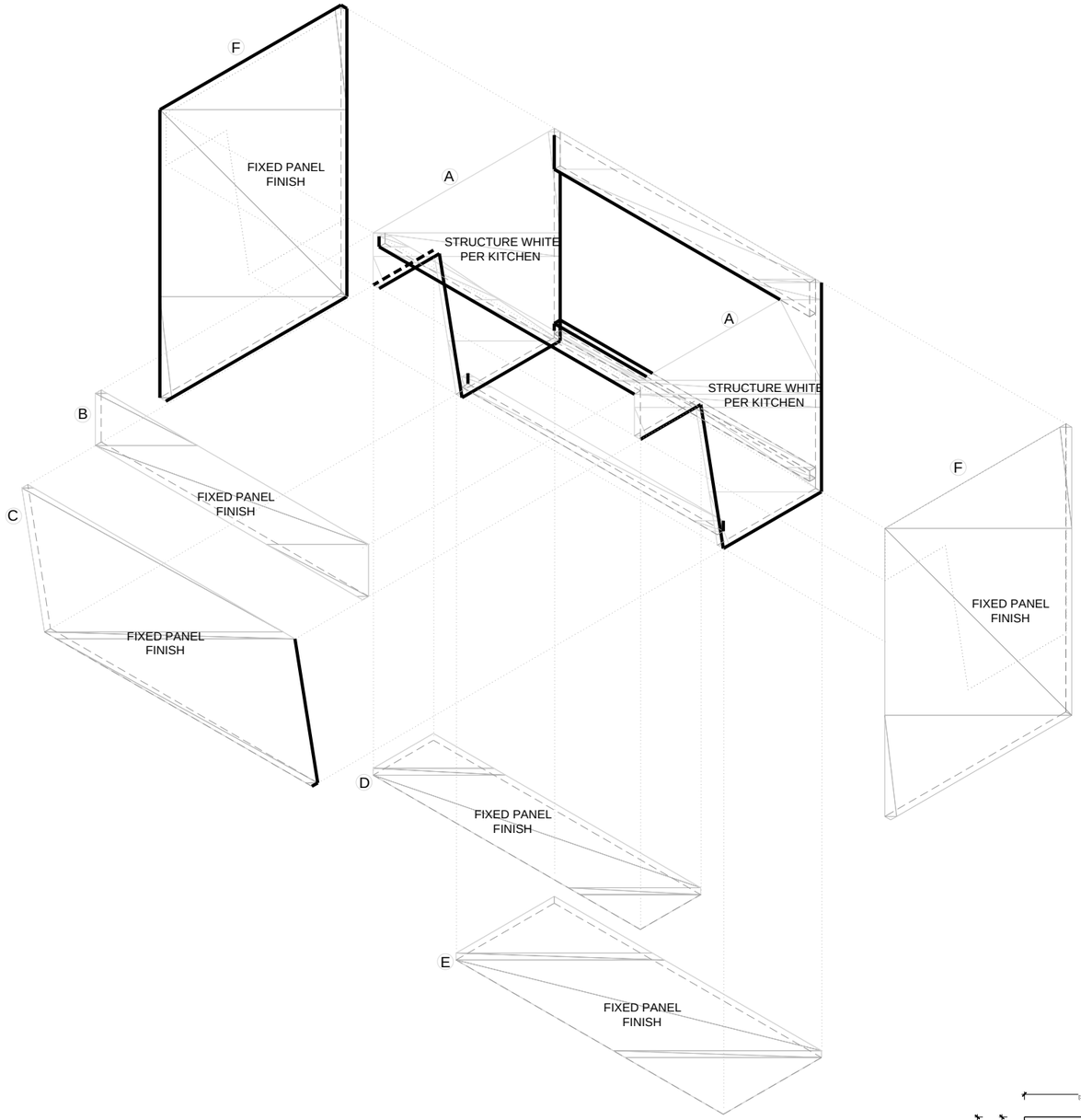

PARTS BY KITCHEN SCALE 1/2"=1'-0"
KITCHEN ADA SINK

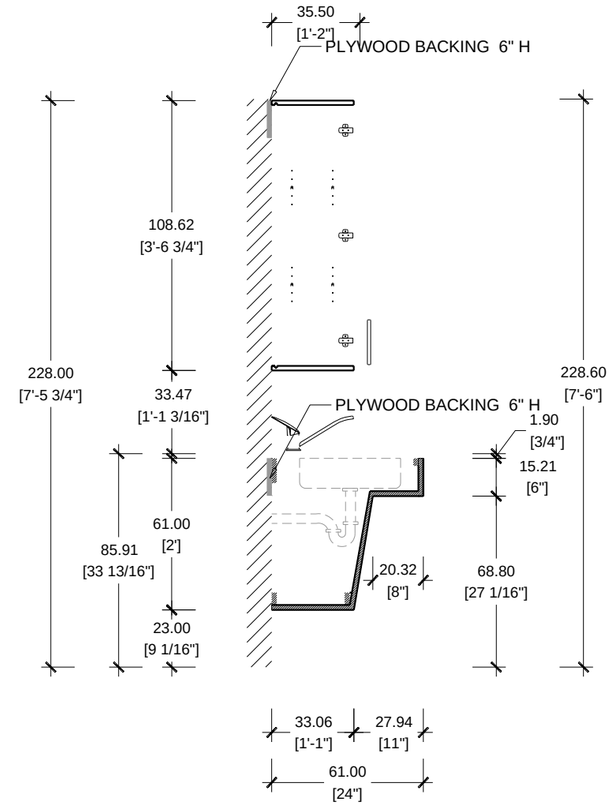

SECTION SCALE 1/2"=1'-0"
KITCHEN ADA

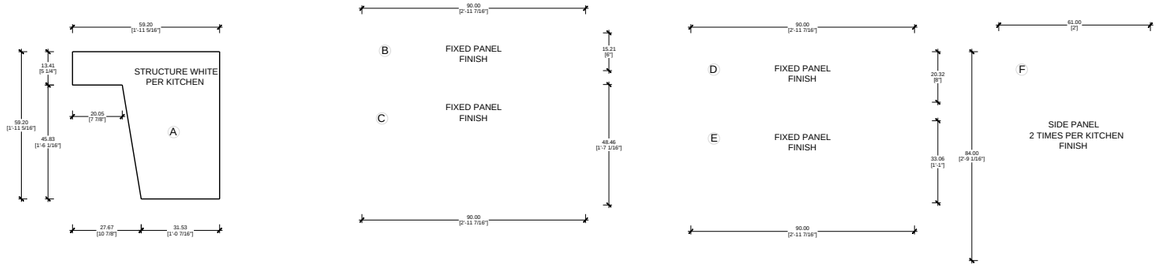

PARTS BY KITCHEN SCALE 1/2"=1'-0"
KITCHEN | BASE 90 CM

A.20
SHEET NUMBER

DATE:
REV:
DIMENSIONS
DRAWN BY:

PROJECT #:

CASA FAMILIA
KITCHEN | VANITIES

ITALIAN KITCHEN AND BATH
kitchen | bath | tile | closet
1777 NW 72TH AVE. MIAMI FL, 33126
T. 305.599.9000 F. 305.599.9870

VANITIES

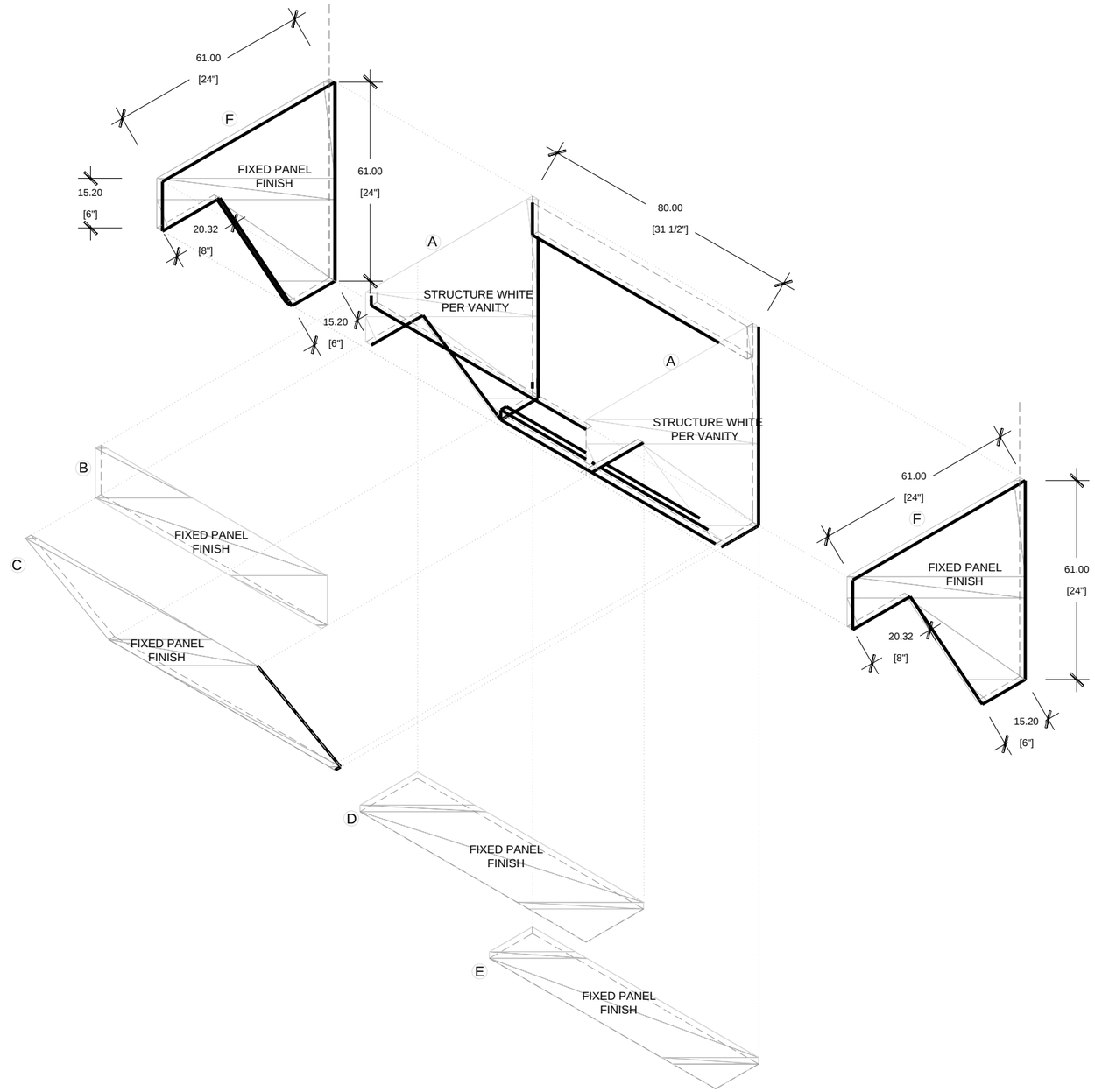

PARTS BY VANITIES SCALE 1/2"=1'-0"
VANITIES ADA SINK

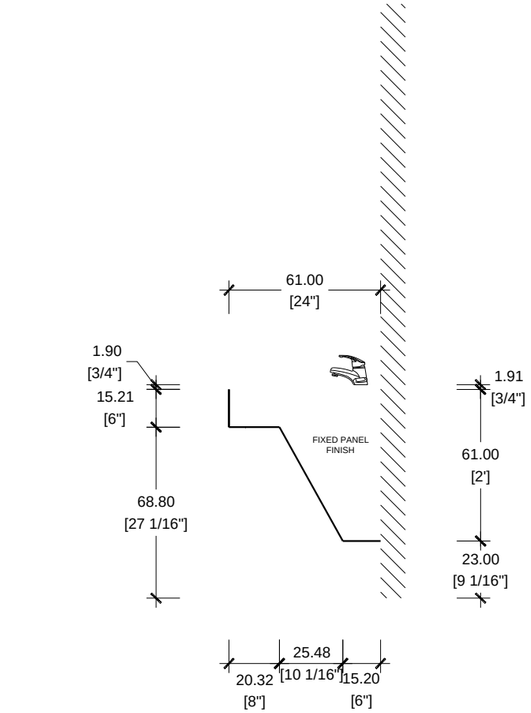

SIDE VIEW SCALE 1/2"=1'-0"
CASA FAMILIA / VANITY TYPE V2

A.21
SHEET NUMBER

DATE:
REV:
DIMENSIONS
DRAWN BY:

PROJECT #:

CASA FAMILIA
KITCHEN | VANITIES

ITALIAN KITCHEN AND BATH
kitchen | bath | tile | closet
1777 NW 72TH AVE. MIAMI FL. 33126
T. 305.599.9000 F. 305.599.9870